WASTE MANAGEMENT OF NEW HAMPSHIRE, INC.
TURNKEY RECYCLING & ENVIRONMENTAL ENTERPRISE
BORROW AREA 6E & 6W PROJECT

ROCHESTER, NEW HAMPSHIRE

APRIL 2013

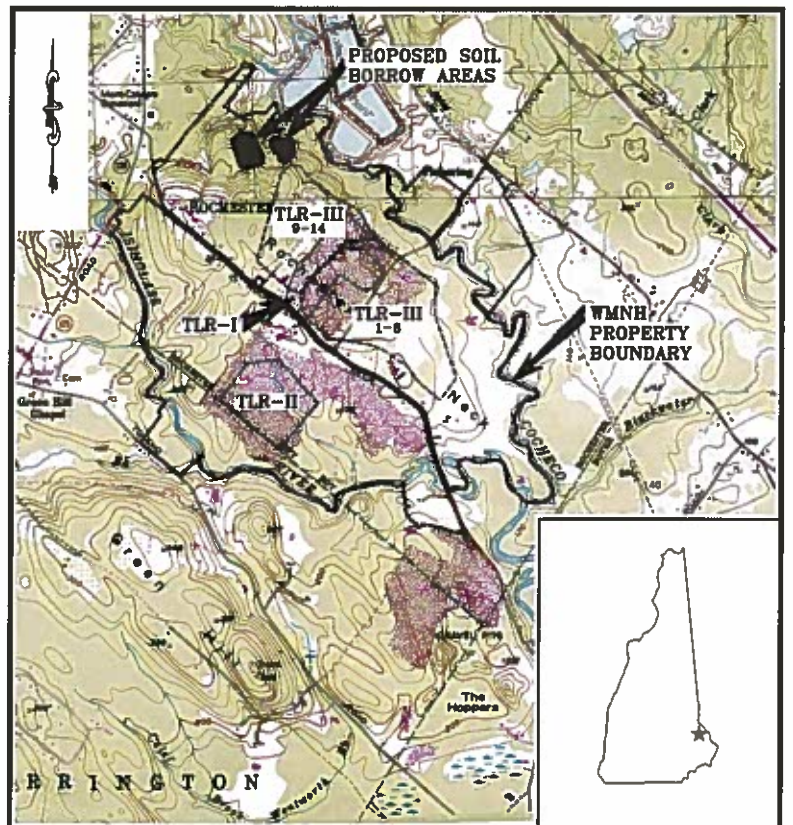

FROM USGS TOPOGRAPHIC MAP- ROCHESTER, NEW HAMPSHIRE (PROVISIONAL 1983)

LOCUS PLAN

SCALE: 1"=2000'

RECEIVED
OCT 1 1 2013
Planning Dept.

SHEET INDEX

SHEET NO.	TITLE
1	NOTES, LEGEND, AND ABBREVIATIONS
2	SITE VICINITY PLAN
3	EXISTING CONDITIONS
△ 4	EXCAVATION, GRADING, AND BASIN 6 RESTORATION PLAN - BORROW AREA 6E
△ 5	EXCAVATION, GRADING, AND SITE RECLAMATION PLAN - BORROW AREA 6W
6-9	DETAILS

FOR MORE INFORMATION ABOUT THESE PLANS, CONTACT THE CITY OF ROCHESTER PLANNING DEPARTMENT, 31 WAKEFIELD STREET, ROCHESTER, NH 03867 (603) 335-1338.

ROCHESTER PLANNING BOARD
APPROVAL CERTIFIED BY: [signature] DATE: 12/18/13

THE DEVELOPMENT DEPICTED IN THESE DRAWINGS MUST BE IN COMPLIANCE WITH ALL APPLICABLE LAW-INCLUDING ALL PERTINENT PROVISIONS OF THE "CITY OF ROCHESTER SITE PLAN REGULATIONS"- UNLESS OTHERWISE WAIVED.

REVISION TABLE			
△	5/6/2013	MODIFIED OUTLET PROTECTION APRON AND CULVERT ON SHEET C04 AND REMOVED HISTORIC WETLAND FILL PATTERN ON C04 AND C05	TWR
NO.	DATE	DESCRIPTION	BY

THE STATE OF NEW HAMPSHIRE
R SCOTT SHILLABER
No. 6775
LICENSED
PROFESSIONAL ENGINEER

PREPARED FOR:

WASTE MANAGEMENT

WASTE MANAGEMENT OF NEW HAMPSHIRE, INC.
30 ROCHESTER NECK ROAD
ROCHESTER, NEW HAMPSHIRE 03839

PREPARED BY:

SANBORN HEAD

20 FOUNDRY STREET, CONCORD, NEW HAMPSHIRE 03301
(603) 229-1900 FAX (603) 229-1919

Certified 12/18/13
[signature], Seth Creighton

NOTES:

1. EXISTING TOPOGRAPHY AND SITE FEATURES WERE PROVIDED TO SANBORN HEAD IN ELECTRONIC FILES TITLED, "TREE-1.DWG" THROUGH "TREE-11.DWG" COMPILED USING PHOTOGRAMMETRIC METHODS BY AERO-METRIC, INC. OF DULLES, VIRGINIA FOR WASTE MANAGEMENT OF NEW HAMPSHIRE, INC. (WMNH) USING AERIAL PHOTOGRAPHY DATED APRIL 22, 2011. ORIGINAL SCALE OF 1" = 100' AND CONTOUR INTERVAL OF 2 FEET. VERTICAL DATUM IS BASED ON NGVD 1929. GRID IS BASED ON NEW HAMPSHIRE STATE PLANE COORDINATE SYSTEM NAD 1983.

2. TLR-III PHASES 1-8 LIMIT OF WASTE CONTAINMENT WAS TAKEN FROM DRAWINGS PREPARED FOR WMNH TITLED "MECHANICALLY STABILIZED EARTH (MSE) BERM EXPANSION", BY GOLDER ASSOCIATES OF MANCHESTER NEW HAMPSHIRE, DATED AUGUST 2001, ORIGINAL SCALE OF 1" = 200'.

3. TLR-III PHASES 9-14 LIMIT OF WASTE CONTAINMENT WAS TAKEN FROM SHEET 3 OF DRAWINGS PREPARED FOR WMNH TITLED "TLR-III REFUSE DISPOSAL FACILITY PHASES 9-14", BY SANBORN HEAD DATED DECEMBER 2003, REVISED JUNE 2004. ORIGINAL SCALE OF 1" = 120'.

4. PROPERTY LINE, TAX MAP, AND LOT INFORMATION WAS COMPILED FROM:

   A. ELECTRONIC (AUTOCAD) TAX MAP FILES CREATED BY CARTOGRAPHICS ASSOC. INC. OF LITTLETON, NEW HAMPSHIRE LAST REVISED ON APRIL 1, 2005.

   B. A PLAN TITLED "BOUNDARY COMPILATION AND FOOTPRINT COMPILATION OF TLR-I AND TLR-III, ROCHESTER NECK ROAD, GONIC, NEW HAMPSHIRE" PREPARED FOR WASTE MANAGEMENT OF NEW HAMPSHIRE, INC. BY CHAS. H. SELLS, INC. OF NASHUA, NEW HAMPSHIRE DATED JANUARY 29, 2002 AT A SCALE OF 1" = 300'.

5. EXISTING MONITORING WELL AND GAS PROBE LOCATIONS WERE PROVIDED TO SANBORN HEAD BY WMNH.

6. TEST PITS TP-100 THROUGH TP-121 WERE COMPLETED BY WMNH AND OBSERVED BY SANBORN HEAD ON SEPTEMBER 19 AND 20, 2012. ADDITIONAL TEST PITS SHOWN WERE OBSERVED BY SANBORN HEAD DURING A PERIOD FROM FEBRUARY 3 THROUGH FEBRUARY 6, 1997.

7. BORINGS WERE DRILLED BY CAPITAL ENVIRONMENTAL DRILLING WITH OVERSIGHT BY SANBORN HEAD DURING A PERIOD FROM APRIL 30 TO MAY 5, 1997.

8. PIEZOMETERS 6E-P1 AND 6W-P1 THROUGH 6W-P5 WERE INSTALLED BY MAINE TEST BORINGS IN JANUARY AND FEBRUARY 2013 AND OBSERVED BY SANBORN HEAD. ADDITIONAL BORINGS WERE TAKEN FROM THE "HYDROGEOLOGIC REPORT, STANDARD PERMIT APPLICATION FOR A SOLID WASTE MANAGEMENT FACILITY" PREPARED FOR WMNH BY GOLDER ASSOCIATES, INC. DATED SEPTEMBER 2003.

9. THE 100-YEAR FLOODPLAIN WAS OBTAINED BASED ON INFORMATION PROVIDED ON THE FEDERAL EMERGENCY MANAGEMENT AGENCY (FEMA) "FLOOD INSURANCE RATE MAP, STRAFFORD COUNTY, NEW HAMPSHIRE" PANEL 302 OF 405, EFFECTIVE DATE MAY 17, 2005. THE PROJECT IS NOT LOCATED IN THE FLOODPLAIN AREA.

10. SOIL TYPE INFORMATION WAS OBTAINED FROM USDA NATURAL RESOURCES CONSERVATION SERVICE (NRCS) WEB SOIL SURVEY (WSS).

11. SOILS INSIDE THE LIMIT OF WASTE CONTAINMENT ARE ASSUMED TO BE HYDROLOGIC SOIL GROUP C.

12. AN ALTERATION OF TERRAIN (SITE-SPECIFIC) PERMIT NO. WPS-6846C (FILE NO. 20031230-01) WAS ISSUED FOR THE TLR PHASE 9-14 CONSTRUCTION. THE PERMIT EXPIRES JULY 12, 2014. THE AREA COVERED BY THIS PERMIT INCLUDES STORMWATER BASIN NO. 6, WHICH IS PART OF THE PROPOSED BORROW AREA 6E. OTHER HISTORICAL SITE ACTIVITIES (NOT PROXIMATE TO THE PROPOSED LIMIT OF WORK) HAVE BEEN PERMITTED UNDER THE AOT PROGRAM, INCLUDING: FILE NO. 20081222-01 (WPS-8349 TREE HEALTHCARE WASTE FACILITY); FILE NO 19970724-01 (WPS-4890B WATSON PIT EXPANSION); FILE NO. 19950210A (WPR-4350A TLR-II CAP); 19930924A (WPN-4101 GOLF DRIVING RANGE); 19930430A (WPR-4179C TLR-II(I); 19921202A (WPT-3971 COMPOSTING FACILITY); 19910430A (WPR-3748E BORROW AREA/TLR II); 19900716A (WPW-3620 STORMWATER MANAGEMENT SYSTEM IMPROVEMENT); 19900705A (WPM-3634 MATERIAL RECOVERY FACILITY); 19900214C (WPW-3498A BUCHANAN PROPERTY); 19890826A (WPR-3327 TLR-I LANDFILL BASIN); 19880914A (WPW-2967 GAS RECOVERY); 19880613D (WPR-2700 TLR II LANDFILL); 19880204A (WPW-2573 TLR PHASE I); 19871221A (WPW-2505 TURNKEY LANDFILL).

13. THE PROJECT AREA WILL BE USED FOR EARTH EXCAVATION AND BORROW ACTIVITIES.

14. RUNOFF DIRECTED TO PROPOSED BORROW AREA 6E (BASIN 6) IS GENERATED IN AREAS USED FOR EXISTING SOLID WASTE MANAGEMENT ACTIVITIES; AS SUCH, A SOURCE CONTROL PLAN HAS BEEN PREPARED. THE DISTURBANCES ASSOCIATED WITH THE SOLID WASTE MANAGEMENT ACTIVITIES WERE PERMITTED UNDER WPS-6846C (SEE NOTE 12). THE SITE MAINTAINS A STORM WATER POLLUTION PREVENTION PLAN REQUIRED BY THE NPDES MULTI-SECTOR GENERAL PERMIT.

15. PIEZOMETERS WITHIN THE LIMIT OF DISTURBANCE WILL BE DECOMMISSIONED PRIOR TO THE START OF BORROW ACTIVITIES.

16. A WRITTEN UPDATE OF THE PROJECT AND REVISED PLANS DOCUMENTING THE PROJECT STATUS WILL BE SUBMITTED TO THE NHDES EVERY FIVE YEARS FROM THE DATE OF THE ALTERATION OF TERRAIN PERMIT.

17. FOR FURTHER INFORMATION, CONTACT SCOTT SHILLABER, P.E. AT SANBORN, HEAD AND ASSOCIATES, INC. BY TELEPHONE AT (603) 229-1900 OR VIA E-MAIL AT RSSHILLABER@SANBORNHEAD.COM.

FOR MORE INFORMATION ABOUT THESE PLANS, CONTACT THE CITY OF ROCHESTER PLANNING DEPARTMENT, 31 WAKEFIELD STREET, ROCHESTER, NH 03867 (603) 335-1338.

ROCHESTER PLANNING BOARD
APPROVAL CERTIFIED BY: DATE:

WETLANDS NOTES:

1. STATE AND FEDERAL JURISDICTIONAL WETLANDS PROXIMATE TO THE PROPOSED SOIL BORROW AREAS WERE DELINEATED BY N.H. CERTIFIED WETLAND SCIENTIST, BARRY H. KEITH, DURING OCTOBER 2012 USING TOTAL STATION SURVEY METHODS AND IN ACCORDANCE WITH THE FOLLOWING GUIDANCE DOCUMENTS:

   A. N.H. CODE OF ADMINISTRATIVE RULES (ENV-WT 301.01) WITH THE TECHNIQUES OUTLINED IN THE 1987 "U.S. ARMY CORPS OF ENGINEERS WETLAND DELINEATION MANUAL, TECHNICAL REPORT Y-87-1."

   B. U.S. ARMY CORPS OF ENGINEERS. 2009. "REGIONAL SUPPLEMENT TO THE CORPS OF ENGINEERS WETLAND DELINEATION MANUAL: NORTHCENTRAL AND NORTHEAST REGION. U.S. ARMY CORPS OF ENGINEERS RESEARCH AND DEVELOPMENT CENTER, ENVIRONMENTAL LABORATORY ERDC/EL TR-09-19."

   C. U.S. ARMY CORPS OF ENGINEERS. 2012. "NATIONAL LIST OF PLANT SPECIES THAT OCCUR IN WETLANDS: NORTHEAST REGION. U.S. ARMY CORPS OF ENGINEERS RESEARCH AND DEVELOPMENT CENTER, ENVIRONMENTAL LABORATORY.

   D. N.H. CODE OF ADMINISTRATIVE RULES (ENV-WT 301.02) WITH THE U.S. FISH AND WILDLIFE SERVICE MANUAL FWS/OBS-79/31 ENTITLED "CLASSIFICATION OF WETLANDS AND DEEPWATER HABITATS OF THE UNITED STATES, COWARDIN *ET AL.* 1979."

   E. NEW ENGLAND HYDRIC SOILS TECHNICAL COMMITTEE. 2004. 3RD ED., "FIELD INDICATORS FOR IDENTIFYING HYDRIC SOILS IN NEW ENGLAND." NEW ENGLAND INTERSTATE WATER POLLUTION CONTROL COMMISSION, LOWELL, MA.

   F. U.S. DEPARTMENT OF AGRICULTURE, NATURAL RESOURCE CONSERVATION SERVICE. 2010. "FIELD INDICATORS OF HYDRIC SOILS IN THE UNITED STATES, VERSION 7.0." L.M. VASILAS, G.W. HURT, AND C.V. NOBLE (EDS.). USDA, NRCS, IN COOPERATION WITH THE NATIONAL TECHNICAL COMMITTEE FOR HYDRIC SOILS.

2. ADDITIONAL WETLANDS SHOWN WERE COMPILED FROM:

   A. DRAWINGS PREPARED BY SANBORN HEAD TITLED, "APPLICATION FOR SITE PLAN REVIEW, TLR-III PHASES 9-14," DATED FEBRUARY 2004.

   B. THE NATIONAL WETLANDS INVENTORY OBTAINED FROM THE NEW HAMPSHIRE GRANIT DATABASE, LAST UPDATED IN 2001.

   C. DRAWINGS PREPARED BY SANBORN HEAD TITLED, "ALTERATION OF TERRAIN & WETLANDS APPLICATION PLANS," DATED DECEMBER 2008.

   D. A DRAWING ENTITLED "083080.DWG", PROVIDED BY CHAS H. SELLS OF NASHUA, NEW HAMPSHIRE ON AUGUST 5, 2008. THE DRAWING CONTAINS WETLAND DELINEATION PERFORMED BY B. H. KEITH ASSOCIATES OF FREEDOM, NEW HAMPSHIRE IN JULY 2008.

ABBREVIATIONS:

CPP	CORRUGATED POLYETHYLENE PIPE
RCP	REINFORCED CONCRETE PIPE

CITY OF ROCHESTER PLANNING BOARD APPROVAL NOTES:

1. ALL ON SITE ACTIVITY IS RESTRICTED TO THE HOURS OF 6:00 AM TO 6:00 PM, MONDAY THROUGH FRIDAY.

2. AN ORANGE CONSTRUCTION FENCE MUST BE PLACED ALONGSIDE THE WETLAND BUFFER PRIOR TO THE START OF CONSTRUCTION (THIS IS NOT REQUIRED IF THE REQUIRED SILT FENCE IS ORANGE).

3. THE APPLICANT SHALL OBTAIN ALL NECESSARY BLASTING PERMITS FROM THE CITY OF ROCHESTER FIRE DEPARTMENT.

4. NO FUEL (OTHER THAN FUEL TRUCKS) AND NO HAZARDOUS MATERIALS MAY BE STORED ON SITE.

5. A COPY OF THIS NOTICE OF DECISION WILL BE MAINTAINED AT THE TREE FACILITY OFFICES AT THE SITE.

6. THE APPLICANT MUST REMAIN IN COMPLIANCE WITH ALL APPLICABLE PROVISIONS OF RSA 155E.

7. REMOVAL OF VEGETATION SHALL BE COMPLETED WITHIN THE PROJECT LIMITS AS FACILITY OPERATIONS DICTATE.

8. DURING EXCAVATION A SITE WALK MAY BE CONDUCTED BY THE PIT OPERATOR AND THE CITY ENGINEER ON THE FIRST MONDAY OF AUGUST EACH YEAR THE PIT IS IN OPERATION. THE INSPECTION WILL BE TO DETERMINE THAT THE UN-RESTORED AREA IS IN COMPLIANCE WITH THE BOND AMOUNT PREVIOUSLY SET FORTH. IF IT IS DETERMINED THAT THE AREA EXCEEDS THE AMOUNT OF BONDED UNDISTURBED AREA THE OPERATOR WILL HAVE 60 DAYS TO BRING THE UNDISTURBED AREA BACK INTO COMPLIANCE AND/OR ADJUST THE SURETY AMOUNT ACCORDINGLY.

   IF NO ACTION IS TAKEN WITHIN 60 DAYS BY THE OPERATOR THEN THE PIT OPERATOR WILL BE ORDERED TO CEASE THE EXPORT OF ANY MATERIAL UNTIL THE AREA IS BROUGHT TO COMPLIANCE. THE PIT OPERATOR WILL ALSO BE GIVEN NOTICE THAT IF NO ACTION IS TAKEN BY THE ANNIVERSARY OF THE AUGUST INSPECTION THAT THE CITY WILL HAVE THE RIGHT TO CALL THE SURETY AND EXCAVATION PERMIT WILL BE REVOKED.

   UPON COMPLETION OF EXCAVATION THE OPERATOR WILL HAVE ONE YEAR TO COMPLETE ALL REMAINING RESTORATION AS OUTLINED ON THE APPROVED PLANS AND PROVIDE THE CITY WITH AS-BUILT DRAWINGS. IF, AT ANY TIME, A PERIOD OF 12 MONTHS PASSES DURING WHICH NO SIGNIFICANT ACTIVITY OCCURS ON THE SITE AND DURING WHICH THE SITE REMAINS AS AN UN-RECLAIMED PIT, THE CITY OF ROCHESTER MAY DECLARE THE SITE ABANDONED, CALL THE SURETY, AND RECLAIM THE SITE, AS APPROPRIATE.

LEGEND:

EXISTING	PROPOSED
2-FOOT CONTOUR	2-FOOT CONTOUR
150 — 10-FOOT CONTOUR	700 — 10-FOOT CONTOUR
LIMIT OF WASTE CONTAINMENT	RIP RAP
PROPERTY LINE	GABION
ZONING BOUNDARY	LIMIT OF CLEARING
RIP RAP	FENCE
GABION	CULVERT
TREELINE	GRAVEL ROAD
GUARDRAIL	SWALE
EDGE OF ROAD	LIMIT OF DISTURBANCE
SURFACE WATER	SLOPE BREAK
FENCE	C-1 CULVERT DESIGNATION
PAVED ROADWAY	SILT FENCE
GRAVEL ROAD	
SOIL TYPE BOUNDARY	
SbA SOIL TYPE DESIGNATION	
WB-1 BORING (SANBORN HEAD)	
TP 1 TEST PIT (SANBORN HEAD)	
GB-9 BORING (GOLDER ASSOCIATES, INC.)	
PZ-11 PIEZOMETER (BY OTHERS)	
6E-P1 PIEZOMETER (SANBORN HEAD)	
128.9 GROUNDWATER ELEVATION MEASURED FEBRUARY 22, 2013	
GP-49 GAS PROBE	
MW-32B GROUNDWATER MONITORING WELL	
EXISTING TREE/BRUSH	
FM FORCEMAIN	
GM GRAVITY MAIN	
LFG LANDFILL GAS HEADER	
E ELECTRICAL LINE	
BUILDING	
CULVERT	
UTILITY POLE	
POST	
MISC. OBJECT	
SIGN	
LIGHT POST	
C-1 CULVERT DESIGNATION	
TELEPHONE POLE	
250-FOOT NHDES SHORELAND SETBACK	
2012 WETLANDS DELINEATION (SEE WETLANDS NOTE 1)	
NATIONAL WETLANDS INVENTORY	
WETLANDS DELINEATION COMPILED FROM 2000 TO 2008 (SEE WETLANDS NOTE 2)	
100-YR FLOODPLAIN	
100-YR FLOODPLAIN BOUNDARY	
QUARTER-MILE DESIGNATED RIVER SETBACK	

SANBORN HEAD

THE STATE OF NEW HAMPSHIRE — R. SCOTT SHILLABER No. 8775 — LICENSED PROFESSIONAL ENGINEER

NO.	DATE	DESCRIPTION	BY

DRAWN BY: R. CLAY
DESIGNED BY: R. CLAY
REVIEWED BY: K.E. SCHLOSSER
PROJECT MGR: K.E. SCHLOSSER
PIC: R.S. SHILLABER
DATE: APRIL 2013

BORROW AREA 6E & 6W PROJECT
TURNKEY RECYCLING & ENVIRONMENTAL ENTERPRISE
WASTE MANAGEMENT OF NEW HAMPSHIRE, INC.
ROCHESTER, NEW HAMPSHIRE

NOTES, LEGEND, AND ABBREVIATIONS

PROJECT NUMBER: 3415.00

SHEET NUMBER: 1 OF 9

NOTES:

1. SEE SHEET 1 FOR ADDITIONAL NOTES AND LEGEND INFORMATION.

LEGEND:

- EXISTING 10-FOOT ELEVATION CONTOUR
- PROPERTY LINE
- EXISTING LIMIT OF WASTE CONTAINMENT
- FACILITY PHASE LIMIT
- ZONING LINE
- 258-10 TAX MAP - LOT NUMBER
- WETLAND AREA
- WETLANDS DELINEATED NOVEMBER 2012
- 100-YR FLOODPLAIN

A ZONE
I-4 ZONE
I-4A ZONE
I-3 ZONE
250' NHDES SHORELAND SETBACK
100-YR FLOODPLAIN
PROPOSED BORROW AREA 6E
PROPOSED BORROW AREA 6W
LIMIT OF DISTURBANCE
BASIN NO. 6
BASIN NO. 7
BASIN NO. 5
BASIN NO. 1
BASIN NO. 2
NORTH FLARE YARD
UNIFLOW TREATMENT FACILITY
TRIPLEX PUMP STATION
PHASE 14
PHASE 11
PHASE 10
PHASE 9B
PHASE 9A
PHASE 8B
PHASE 8A
PHASE 7B
PHASE 7A
PHASE 13
PHASE 12
PHASE 6
PHASE 5
PHASE 4
PHASE 3
PHASE 2
PHASE 1
TLR-III
CLOSED TLR-I FACILITY
INFILTRATION BASIN
SCALE HOUSE
HAULING COMPANY GARAGE
MAINTENANCE GARAGE
OFFICE
LEACHATE TREATMENT PLANT
GAS RECOVERY PLANT NO. 1
MATERIAL RECOVERY FACILITY
WEST BORROW AREA
RESIDENTIAL DROP-OFF AREA
TREE HEALTH CARE WASTE FACILITY
CONTAINER STORAGE AREA
CLIMO TOPSOIL STOCKPILE
LIMIT OF WASTE CONTAINMENT (TYP.)
ROCHESTER NECK ROAD
GOODWIN ROAD
COCHECO RIVER
BUCK AND DUDLEY ROAD
262-2
262-5
262-6
262-7
262-8
262-18
262-19
262-20
262-21
262-22
262-22-01 - 262-22-14
262-23
262-24
262-25
262-26
262-28
262-29
262-30
262-31
262-32
258-10
257-58
267-1
267-2
267-3
267-4
267-5
267-6
263-62
263-63
266-1
266-2
266-3
266-4
266-5
268-1
268-2

FOR MORE INFORMATION ABOUT THESE PLANS, CONTACT THE CITY OF ROCHESTER PLANNING DEPARTMENT, 31 WAKEFIELD STREET, ROCHESTER, NH 03867 (603) 335-1338.

ROCHESTER PLANNING BOARD
APPROVAL CERTIFIED BY: DATE:

SANBORN HEAD

GRAPHICAL SCALE
200' 100' 0' 200' 400'

THE STATE OF NEW HAMPSHIRE
R. SCOTT SHILLABER
No. 5775
PROFESSIONAL ENGINEER

NO.	DATE	DESCRIPTION	BY

DRAWN BY: R. CLAY
DESIGNED BY: R. CLAY
REVIEWED BY: K.E. SCHLOSSER
PROJECT MGR: K.E. SCHLOSSER
PIC: R.S. SHILLABER
DATE: APRIL 2013

BORROW AREA 6E & 6W PROJECT
TURNKEY RECYCLING & ENVIRONMENTAL ENTERPRISE
WASTE MANAGEMENT OF NEW HAMPSHIRE, INC.
ROCHESTER, NEW HAMPSHIRE

SITE VICINITY PLAN

PROJECT NUMBER: 3415.00

SHEET NUMBER: 2 OF 9

NOTES:

1. SEE SHEET 1 FOR ADDITIONAL NOTES AND LEGEND INFORMATION.
2. GROUNDWATER ELEVATION DATA WAS OBTAINED ON FEBRUARY 22, 2013.

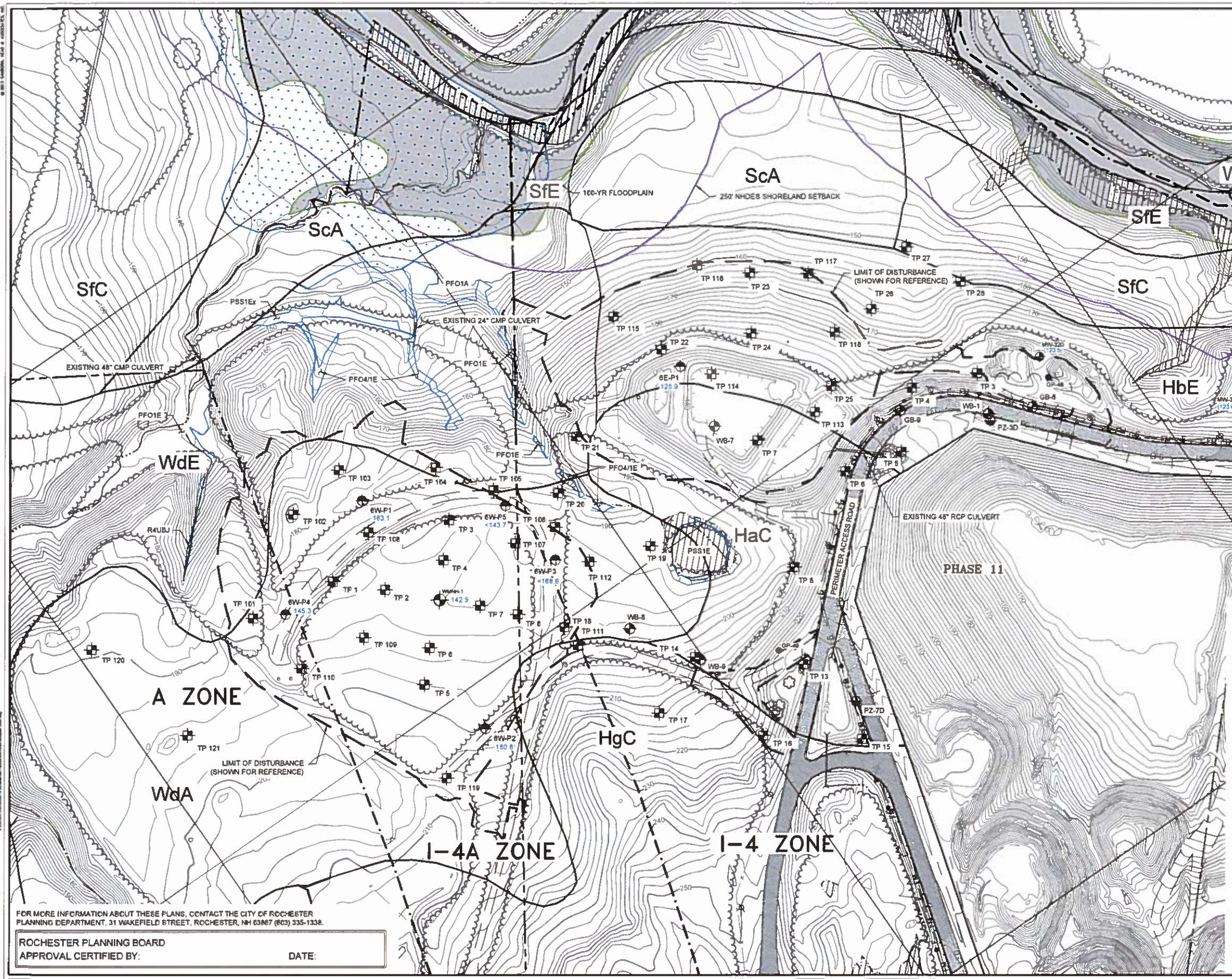

FOR MORE INFORMATION ABOUT THESE PLANS, CONTACT THE CITY OF ROCHESTER PLANNING DEPARTMENT, 31 WAKEFIELD STREET, ROCHESTER, NH 03867 (603) 335-1338.

ROCHESTER PLANNING BOARD
APPROVAL CERTIFIED BY: DATE:

WETLANDS LEGEND (2012)	
WETLAND CODE	WETLAND CLASSIFICATION
PSS1E	PALUSTRINE SCRUB-SHRUB, BROAD-LEAVED DECIDUOUS, SEASONALLY FLOODED/SATURATED
PSS1EX	PALUSTRINE SCRUB-SHRUB, BROAD-LEAVED DECIDUOUS, SEASONALLY FLOODED/SATURATED, EXCAVATED
PFO1E	PALUSTRINE FORESTED, BROAD-LEAVED DECIDUOUS, SEASONALLY FLOODED/SATURATED
PFO1A	PALUSTRINE FORESTED, BROAD-LEAVED DECIDUOUS, TEMPORARILY FLOODED
PFO4/1E	PALUSTRINE FORESTED, NEEDLE-LEAVED EVERGREEN/BROAD-LEAVED DECIDUOUS, SEASONALLY FLOODED/SATURATED
R4UBJ	RIVERINE INTERMITTENT, UNCONSOLIDATED BOTTOM, INTERMITTENTLY FLOODED

SOILS SERIES KEY	
MAP UNIT SYMBOL	MAP UNIT NAME
HaC	HINCKLEY LOAMY SAND, 8 TO 15 PERCENT SLOPES
HbE	HINCKLEY GRAVELLY LOAMY SAND, 15 TO 60 PERCENT SLOPES
HgC	HOLLIS-GLOUCESTER VERY ROCKY FINE SANDY LOAMS, 8 TO 15 PERCENT SLOPES
Ru	RUMMEY FINE SANDY LOAM
Sb	SAUGATUCK LOAMY SAND
ScA	SCANTIC SILT LOAM, 0 TO 3 PERCENT SLOPES
SfC	SUFFIELD SILT LOAM, 3 TO 8 PERCENT SLOPES
SfE	SUFFIELD SILT LOAM, 15 TO 35 PERCENT LOAM
W	WATER
WdA	WINDSOR LOAMY SAND, 0 TO 3 PERCENT SLOPES
WdE	WINDSOR LOAMY SAND, 15 TO 60 PERCENT SLOPES

SANBORN HEAD

GRAPHICAL SCALE
100' 50' 0' 100' 200'

THE STATE OF NEW HAMPSHIRE
R. SCOTT SHILLABER
No. 8775
LICENSED
PROFESSIONAL ENGINEER

NO.	DATE	DESCRIPTION	BY

DRAWN BY: R. CLAY
DESIGNED BY: R. CLAY
REVIEWED BY: K.E. SCHLOSSER
PROJECT MGR: K.E. SCHLOSSER
PIC: R.S. SHILLABER
DATE: APRIL 2013

BORROW AREA 6E & 6W PROJECT
TURNKEY RECYCLING & ENVIRONMENTAL ENTERPRISE
WASTE MANAGEMENT OF NEW HAMPSHIRE, INC.
ROCHESTER, NEW HAMPSHIRE

EXISTING CONDITIONS

PROJECT NUMBER: 3415.00

SHEET NUMBER: 3 OF 9

NOTES:

1. SEE SHEET 1 FOR NOTES AND LEGEND INFORMATION.

AREA OF DISTURBANCE = 265,000 SF

BORROW AREA-6E APPROX. VOLUME = 160,000 CY TO BE EXCAVATED

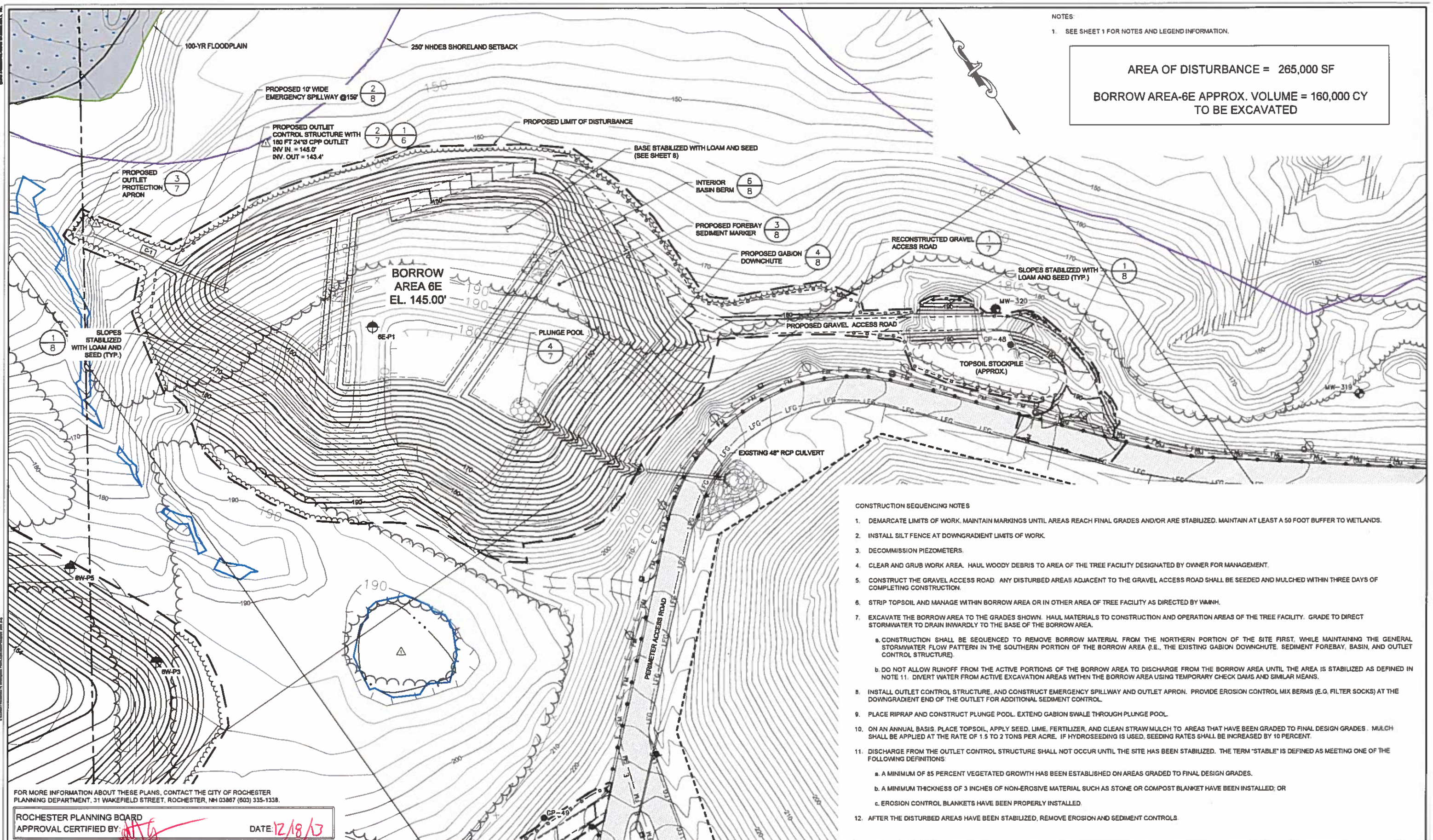

FOR MORE INFORMATION ABOUT THESE PLANS, CONTACT THE CITY OF ROCHESTER PLANNING DEPARTMENT, 31 WAKEFIELD STREET, ROCHESTER, NH 03867 (603) 335-1338.

ROCHESTER PLANNING BOARD APPROVAL CERTIFIED BY: DATE: 12/18/13

CONSTRUCTION SEQUENCING NOTES

1. DEMARCATE LIMITS OF WORK. MAINTAIN MARKINGS UNTIL AREAS REACH FINAL GRADES AND/OR ARE STABILIZED. MAINTAIN AT LEAST A 50 FOOT BUFFER TO WETLANDS.
2. INSTALL SILT FENCE AT DOWNGRADIENT LIMITS OF WORK.
3. DECOMMISSION PIEZOMETERS.
4. CLEAR AND GRUB WORK AREA. HAUL WOODY DEBRIS TO AREA OF THE TREE FACILITY DESIGNATED BY OWNER FOR MANAGEMENT.
5. CONSTRUCT THE GRAVEL ACCESS ROAD. ANY DISTURBED AREAS ADJACENT TO THE GRAVEL ACCESS ROAD SHALL BE SEEDED AND MULCHED WITHIN THREE DAYS OF COMPLETING CONSTRUCTION.
6. STRIP TOPSOIL AND MANAGE WITHIN BORROW AREA OR IN OTHER AREA OF TREE FACILITY AS DIRECTED BY WMNH.
7. EXCAVATE THE BORROW AREA TO THE GRADES SHOWN. HAUL MATERIALS TO CONSTRUCTION AND OPERATION AREAS OF THE TREE FACILITY. GRADE TO DIRECT STORMWATER TO DRAIN INWARDLY TO THE BASE OF THE BORROW AREA.
   a. CONSTRUCTION SHALL BE SEQUENCED TO REMOVE BORROW MATERIAL FROM THE NORTHERN PORTION OF THE SITE FIRST, WHILE MAINTAINING THE GENERAL STORMWATER FLOW PATTERN IN THE SOUTHERN PORTION OF THE BORROW AREA (I.E., THE EXISTING GABION DOWNCHUTE, SEDIMENT FOREBAY, BASIN, AND OUTLET CONTROL STRUCTURE).
   b. DO NOT ALLOW RUNOFF FROM THE ACTIVE PORTIONS OF THE BORROW AREA TO DISCHARGE FROM THE BORROW AREA UNTIL THE AREA IS STABILIZED AS DEFINED IN NOTE 11. DIVERT WATER FROM ACTIVE EXCAVATION AREAS WITHIN THE BORROW AREA USING TEMPORARY CHECK DAMS AND SIMILAR MEANS.
8. INSTALL OUTLET CONTROL STRUCTURE, AND CONSTRUCT EMERGENCY SPILLWAY AND OUTLET APRON. PROVIDE EROSION CONTROL MIX BERMS (E.G. FILTER SOCKS) AT THE DOWNGRADIENT END OF THE OUTLET FOR ADDITIONAL SEDIMENT CONTROL.
9. PLACE RIPRAP AND CONSTRUCT PLUNGE POOL. EXTEND GABION SWALE THROUGH PLUNGE POOL.
10. ON AN ANNUAL BASIS, PLACE TOPSOIL, APPLY SEED, LIME, FERTILIZER, AND CLEAN STRAW MULCH TO AREAS THAT HAVE BEEN GRADED TO FINAL DESIGN GRADES. MULCH SHALL BE APPLIED AT THE RATE OF 1.5 TO 2 TONS PER ACRE. IF HYDROSEEDING IS USED, SEEDING RATES SHALL BE INCREASED BY 10 PERCENT.
11. DISCHARGE FROM THE OUTLET CONTROL STRUCTURE SHALL NOT OCCUR UNTIL THE SITE HAS BEEN STABILIZED. THE TERM "STABLE" IS DEFINED AS MEETING ONE OF THE FOLLOWING DEFINITIONS:
    a. A MINIMUM OF 85 PERCENT VEGETATED GROWTH HAS BEEN ESTABLISHED ON AREAS GRADED TO FINAL DESIGN GRADES.
    b. A MINIMUM THICKNESS OF 3 INCHES OF NON-EROSIVE MATERIAL SUCH AS STONE OR COMPOST BLANKET HAVE BEEN INSTALLED; OR
    c. EROSION CONTROL BLANKETS HAVE BEEN PROPERLY INSTALLED.
12. AFTER THE DISTURBED AREAS HAVE BEEN STABILIZED, REMOVE EROSION AND SEDIMENT CONTROLS.

SANBORN HEAD

GRAPHICAL SCALE: 50' 25' 0' 50' 100'

THE STATE OF NEW HAMPSHIRE — R. SCOTT SHILLABER No. 5773 — LICENSED PROFESSIONAL ENGINEER

NO.	DATE	DESCRIPTION	BY
1	5/8/13	MODIFIED OUTLET PROTECTION APRON AND CULVERT AND REMOVED HISTORIC WETLAND FILL PATTERN.	TWR

DRAWN BY: R. CLAY
DESIGNED BY: R. CLAY
REVIEWED BY: K.E. SCHLOSSER
PROJECT MGR: K.E. SCHLOSSER
PIC: R.S. SHILLABER
DATE: APRIL 2013

BORROW AREA 6E & 6W PROJECT
TURNKEY RECYCLING & ENVIRONMENTAL ENTERPRISE
WASTE MANAGEMENT OF NEW HAMPSHIRE, INC.
ROCHESTER, NEW HAMPSHIRE

EXCAVATION, GRADING, AND BASIN 6 RESTORATION PLAN - BORROW AREA 6E

PROJECT NUMBER: 3415.00

SHEET NUMBER: 4 OF 9

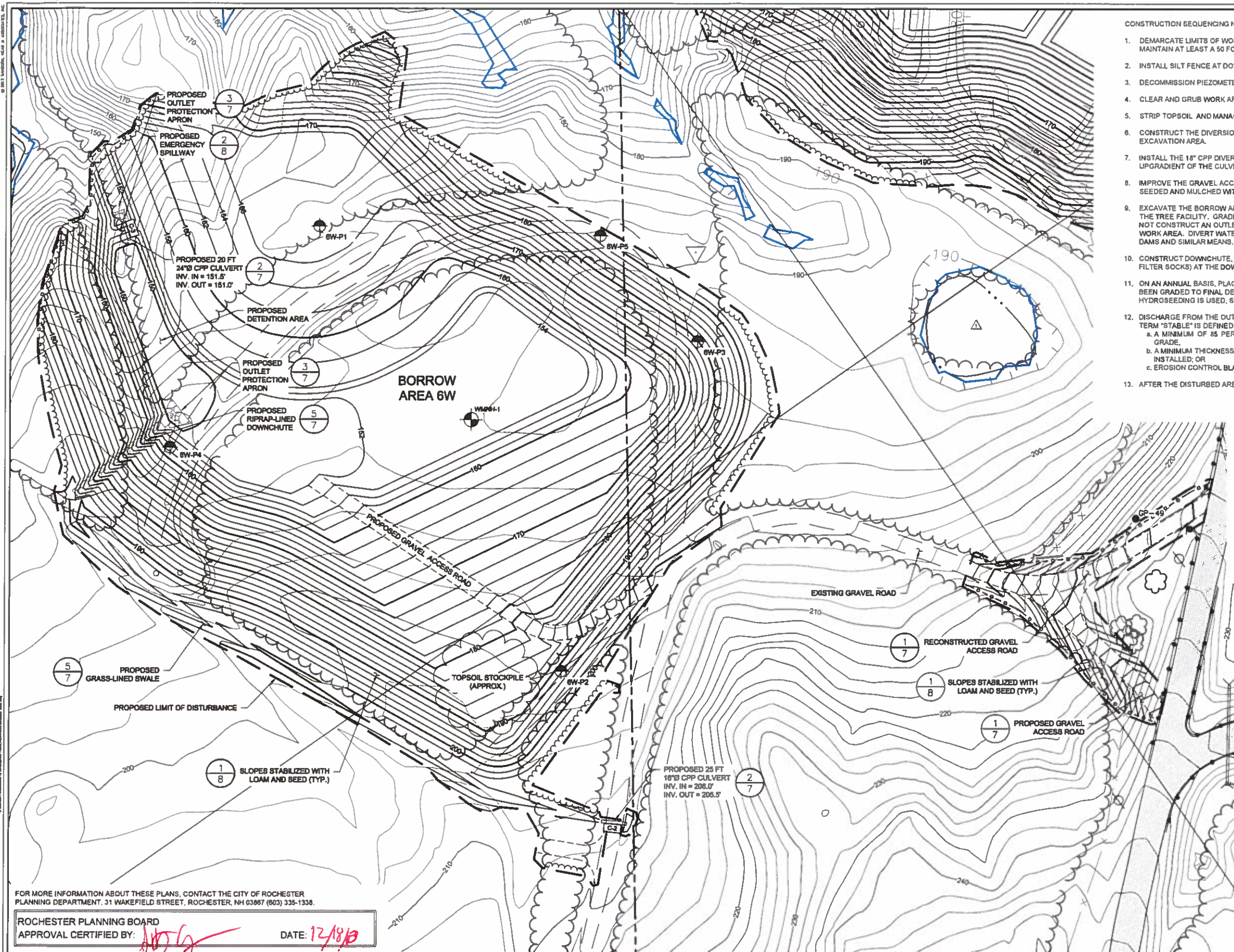

CONSTRUCTION SEQUENCING NOTES:

1. DEMARCATE LIMITS OF WORK. MAINTAIN MARKINGS UNTIL AREAS REACH FINAL GRADES AND/OR ARE STABILIZED. MAINTAIN AT LEAST A 50 FOOT BUFFER TO WETLANDS.
2. INSTALL SILT FENCE AT DOWNGRADIENT LIMITS OF WORK.
3. DECOMMISSION PIEZOMETERS.
4. CLEAR AND GRUB WORK AREA. HAUL WOODY DEBRIS TO OTHER AREAS OF THE TREE FACILITY FOR MANAGEMENT.
5. STRIP TOPSOIL AND MANAGE WITHIN BORROW AREA OR IN OTHER AREA OF TREE FACILITY AS DIRECTED BY WMNH.
6. CONSTRUCT THE DIVERSION SWALE ON THE WESTERN SIDE OF THE BORROW AREA. DIVERT WATER INTO THE EXCAVATION AREA.
7. INSTALL THE 18" CPP DIVERSION CULVERT BELOW THE GRAVEL ACCESS ROAD. INSTALL SILT FENCE/HAY BALES UPGRADIENT OF THE CULVERT AS NEEDED.
8. IMPROVE THE GRAVEL ACCESS ROAD. ANY DISTURBED AREAS ADJACENT TO THE GRAVEL ACCESS ROADS SHALL BE SEEDED AND MULCHED WITHIN THREE DAYS OF CONSTRUCTION.
9. EXCAVATE THE BORROW AREA TO GRADES SHOWN AND HAUL MATERIALS TO CONSTRUCTION AND OPERATION AREAS OF THE TREE FACILITY. GRADE TO DIRECT STORMWATER TO DRAIN INWARDLY TO THE BASE OF THE BORROW AREA. DO NOT CONSTRUCT AN OUTLET FROM THE BORROW AREA WHICH WOULD ALLOW STORMWATER TO DISCHARGE FROM THE WORK AREA. DIVERT WATER FROM ACTIVE EXCAVATION AREAS WITHIN THE BORROW AREA USING TEMPORARY CHECK DAMS AND SIMILAR MEANS.
10. CONSTRUCT DOWNCHUTE, DETENTION AREA, AND CULVERT OUTLET. PROVIDE EROSION CONTROL MIX BERMS (E.G., FILTER SOCKS) AT THE DOWNGRADIENT END OF THE OUTLET FOR ADDITIONAL SEDIMENT CONTROL.
11. ON AN ANNUAL BASIS, PLACE TOPSOIL, APPLY SEED, LIME, FERTILIZER, AND CLEAN STRAW MULCH TO AREAS THAT HAVE BEEN GRADED TO FINAL DESIGN GRADES. MULCH SHALL BE APPLIED AT THE RATE OF 1.5 TO 2 TONS PER ACRE. IF HYDROSEEDING IS USED, SEEDING RATES SHALL BE INCREASED BY 10 PERCENT.
12. DISCHARGE FROM THE OUTLET CONTROL STRUCTURE SHALL NOT OCCUR UNTIL THE SITE HAS BEEN STABILIZED. THE TERM "STABLE" IS DEFINED AS MEETING ONE OF THE FOLLOWING DEFINITIONS:
    a. A MINIMUM OF 85 PERCENT VEGETATED GROWTH HAS BEEN ESTABLISHED ON AREAS GRADED TO FINAL DESIGN GRADE.
    b. A MINIMUM THICKNESS OF 3 INCHES OF NON-EROSIVE MATERIAL SUCH AS STONE OR COMPOST BLANKET HAVE BEEN INSTALLED; OR
    c. EROSION CONTROL BLANKETS HAVE BEEN PROPERLY INSTALLED.
13. AFTER THE DISTURBED AREAS HAVE BEEN STABILIZED, REMOVE EROSION AND SEDIMENT CONTROLS.

NOTE:

1. SEE SHEET 1 FOR NOTES AND LEGEND INFORMATION.

AREA OF DISTURBANCE = 383,000 SF

BORROW AREA-6W APPROX. VOLUME = 250,000 CY TO BE EXCAVATED

FOR MORE INFORMATION ABOUT THESE PLANS, CONTACT THE CITY OF ROCHESTER PLANNING DEPARTMENT, 31 WAKEFIELD STREET, ROCHESTER, NH 03867 (603) 335-1338.

ROCHESTER PLANNING BOARD APPROVAL CERTIFIED BY: _____ DATE: 12/18/13

SANBORN HEAD

GRAPHICAL SCALE: 50' 25' 0' 50' 100'

THE STATE OF NEW HAMPSHIRE — R. SCOTT SHILLABER No. 6775 — PROFESSIONAL ENGINEER

NO.	DATE	DESCRIPTION	BY
1	5/6/13	REMOVED HISTORIC WETLAND FILL PATTERN.	TWR

DRAWN BY: R. CLAY
DESIGNED BY: R. CLAY
REVIEWED BY: K.E. SCHLOSSER
PROJECT MGR: K.E. SCHLOSSER
PIC: R.S. SHILLABER
DATE: APRIL 2013

BORROW AREA 6E & 6W PROJECT
TURNKEY RECYCLING & ENVIRONMENTAL ENTERPRISE
WASTE MANAGEMENT OF NEW HAMPSHIRE, INC.
ROCHESTER, NEW HAMPSHIRE

EXCAVATION, GRADING, AND SITE RECLAMATION PLAN - BORROW AREA 6W

PROJECT NUMBER: 3415.00

SHEET NUMBER: 5 OF 9

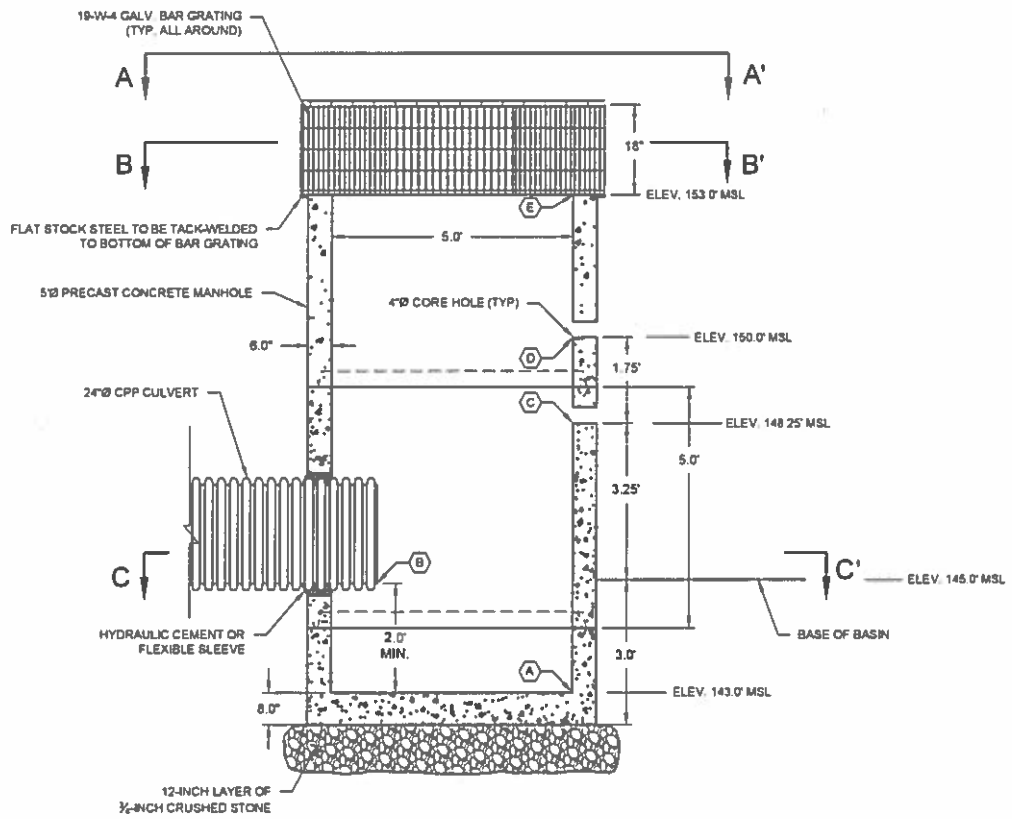

ELEVATION VIEW

BASIN 6E DISCHARGE STRUCTURE DETAIL

1

NOT TO SCALE

POND DISCHARGE STRUCTURE SCHEDULE

		POND 6	
POINT	DESCRIPTION	NO. OF HOLES	INVERT ELEV. (FT)
A	BOTTOM OF SUMP	NA	143.00
B	DISCHARGE CULVERT	NA	145.00
C	FIRST ROW OF CORE HOLES	3	148.25
D	SECOND ROW OF CORE HOLES	3	150.00
E	RIM OF CONCRETE STRUCTURE	NA	153.00

FOR MORE INFORMATION ABOUT THESE PLANS, CONTACT THE CITY OF ROCHESTER PLANNING DEPARTMENT, 31 WAKEFIELD STREET, ROCHESTER, NH 03867 (603) 335-1338.

ROCHESTER PLANNING BOARD
APPROVAL CERTIFIED BY: DATE:

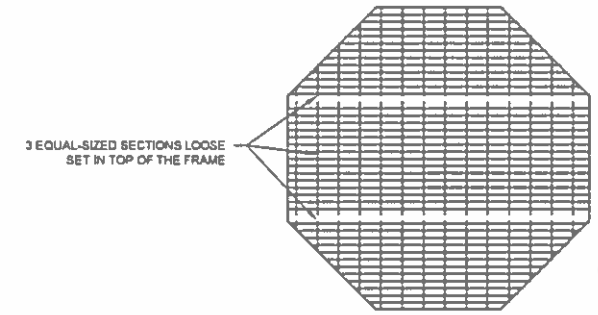

SECTION A-A': PLAN VIEW ABOVE TRASH RACK

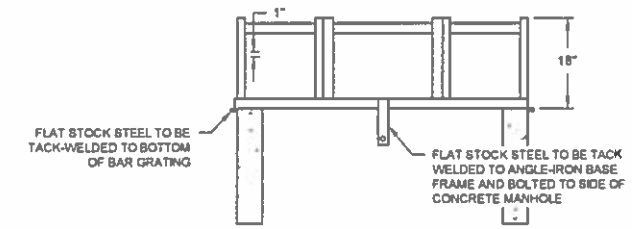

ANGLE-IRON FRAME

NOTES:

1. 19-W-4 GALVANIZED BAR GRATING SHALL HAVE
   - 1 3/16 X 4" NOMINAL SPACING
   - 1" BAR HEIGHT
   - 1/4" BAR THICKNESS
   - 9.26/SF (±)
2. ANGLE-IRON SHALL BE 2"X 2"X ¼". TOP ANGLE IRON SHALL E 1-INCH BELOW TOP OF VERTICAL SUPPORTS.
3. VERTICAL SUPPORTS SHALL BE FABRICATED FROM 2" X ¼" FLATSTOCK.
4. BAR GRATE SIDES SHALL BE TACK-WELDED TO ANGLE-IRON FRAME.
5. BAR GRATE TOP SHALL BE 3 EQUAL-SIZED SECTIONS LOOSE SET IN TOP OF THE FRAME.
6. FRAME SHALL BE SECURED TO TOP OF CATCH BASIN STRUCTURE.

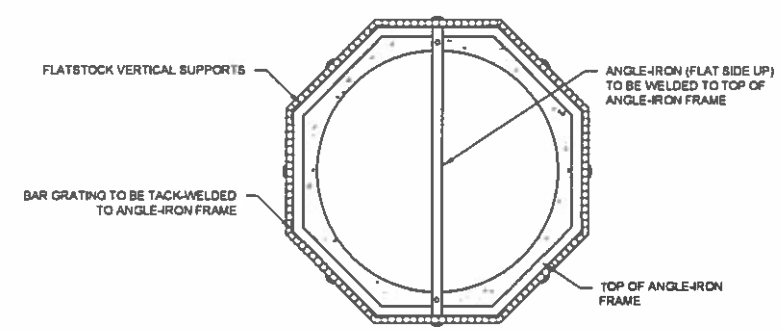

SECTION B-B': PLAN VIEW THROUGH TRASH RACK

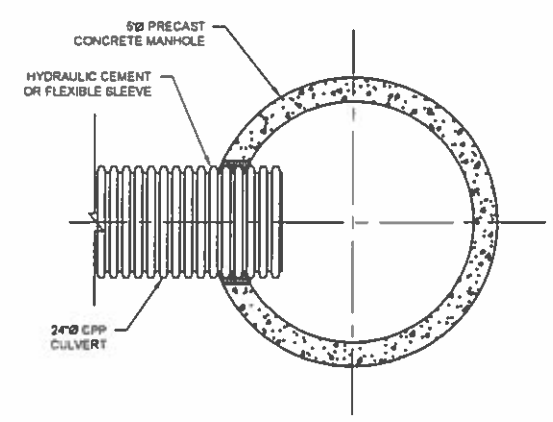

SECTION C-C': PLAN VIEW THROUGH MANHOLE

SANBORN HEAD

SCALE AS NOTED

THE STATE OF NEW HAMPSHIRE R. SCOTT SHILLABER No. 6775 PROFESSIONAL ENGINEER

NO.	DATE	DESCRIPTION	BY

DRAWN BY: R. CLAY
DESIGNED BY: R. CLAY
REVIEWED BY: K.E. SCHLOSSER
PROJECT MGR: K.E. SCHLOSSER
PIC: R.S. SHILLABER
DATE: APRIL 2013

BORROW AREA 6E & 6W PROJECT
TURNKEY RECYCLING & ENVIRONMENTAL ENTERPRISE
WASTE MANAGEMENT OF NEW HAMPSHIRE, INC.
ROCHESTER, NEW HAMPSHIRE

DETAILS

PROJECT NUMBER: 3415.00

SHEET NUMBER: 6 OF 9

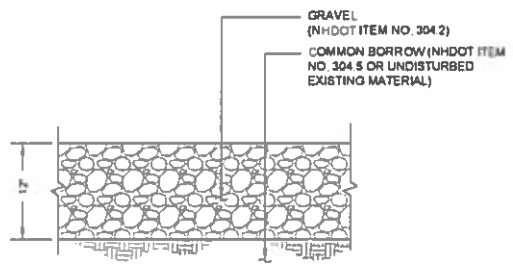

GRAVEL ROAD SECTION

1

NOT TO SCALE

CULVERT SCHEDULE

CULVERT	DESCRIPTION	QUANTITY	TYPE	DIAMETER (INCHES)	LENGTH (FT)	INVERT IN ELEVATION (FT)	INVERT OUT ELEVATION (FT)	SLOPE (FT/FT)
C-1	BASIN 6 OUTFALL	1	CPP	24	170	145.0	143.3	0.0100
C-2	BORROW AREA 6W GRAVEL ROAD	1	CPP	18	25	206.0	205.5	0.0200
C-3	BORROW AREA 6W DISCHARGE	1	CPP	24	20	151.5	151.0	0.0250

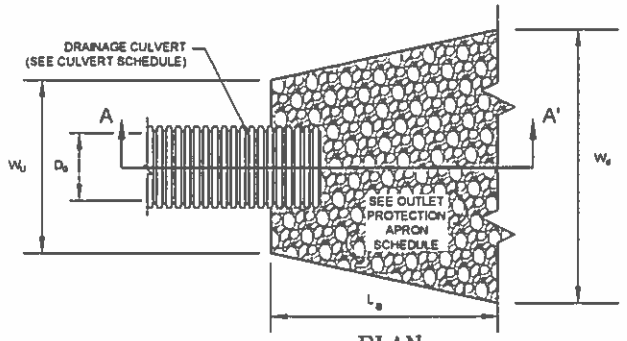

PLAN

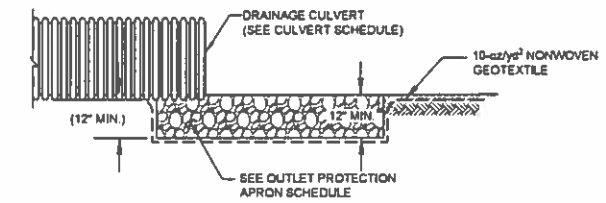

SECTION A–A' – PROFILE

OUTLET PROTECTION APRON SCHEDULE

APRON	CONVEYANCE	DESCRIPTION	D_B (in)	L_a (ft)	W_u (ft)	W_d (ft)	STONE
BORROW AREA 6E	BASIN 6 OUTLET	DISCHARGE TO WETLAND BUFFER	24	16.5	6	22.5	d_{50} = 3"
BORROW AREA 6W	DISCHARGE CULVERT OUTLET	DISCHARGE TO WETLAND BUFFER	18	11	4.5	1.5	d_{50} = 1"
BORROW AREA 6W	RIPRAP-LINED DOWNCHUTE	DISCHARGE TO BORROW AREA	36	23	9	32	d_{50} = 3"

NOTE

1. WHERE THERE IS A STABLE WELL-DEFINED CHANNEL DOWNSTREAM OF THE CULVERT OUTLET, RIPRAP SHALL BE INSTALLED TO THE FULL WIDTH OF THE CHANNEL.

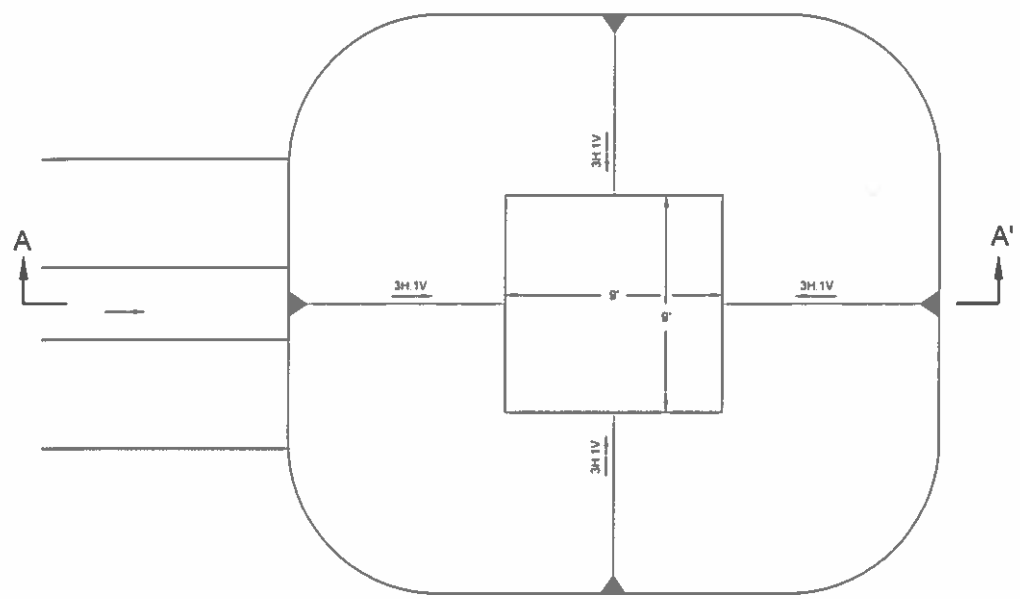

PLAN

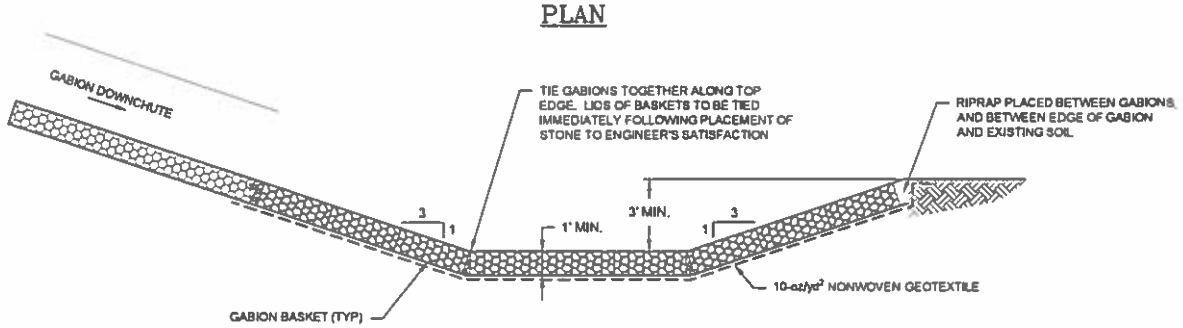

SECTION A–A'

PLUNGE POOL

4

NOT TO SCALE

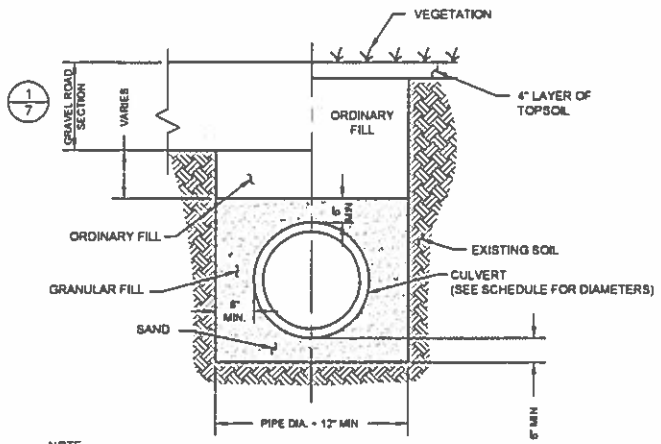

NOTE.

1. SOIL FILL MATERIALS SHALL BE FREE OF ICE, SNOW, ROOTS, SOD, RUBBISH AND OTHER DELETERIOUS OR ORGANIC MATTER.
2. GRANULAR FILL SHALL BE GRADED AS SHOWN BELOW.

CULVERT TRENCH SECTION

2

NOT TO SCALE

GRANULAR FILL

SIEVE SIZE	PERCENT FINER BY WEIGHT
1-INCH	100
No. 10	25 - 95
No. 40	15 - 75
No. 200	0 - 10

ORDINARY FILL

SIEVE SIZE	PERCENT FINER BY WEIGHT
8-INCH	100
4-INCH	90 - 100
No. 40	15 - 95
No. 200	0 - 25

OUTLET PROTECTION APRON

3

NOT TO SCALE

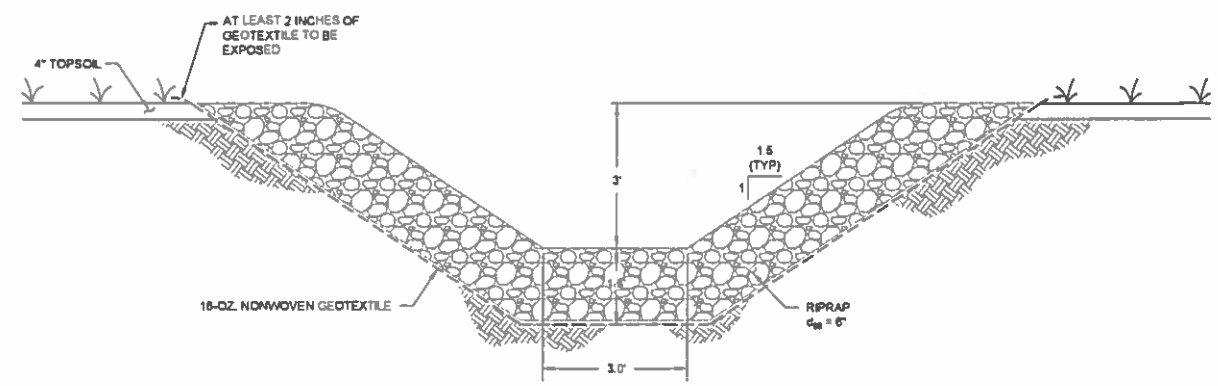

RIPRAP–LINED DOWNCHUTE

5

NOT TO SCALE

FOR MORE INFORMATION ABOUT THESE PLANS, CONTACT THE CITY OF ROCHESTER PLANNING DEPARTMENT, 31 WAKEFIELD STREET, ROCHESTER, NH 03867 (603) 335-1338.

ROCHESTER PLANNING BOARD
APPROVAL CERTIFIED BY: DATE:

SANBORN HEAD

SCALE AS NOTED

THE STATE OF NEW HAMPSHIRE R. SCOTT SHILLABER No. 6773 PROFESSIONAL ENGINEER

NO.	DATE	DESCRIPTION	BY

DRAWN BY: R. CLAY
DESIGNED BY: R. CLAY
REVIEWED BY: K.E. SCHLOSSER
PROJECT MGR: K.E. SCHLOSSER
PIC: R.S. SHILLABER
DATE: APRIL 2013

BORROW AREA 6E & 6W PROJECT
TURNKEY RECYCLING & ENVIRONMENTAL ENTERPRISE
WASTE MANAGEMENT OF NEW HAMPSHIRE, INC.
ROCHESTER, NEW HAMPSHIRE

DETAILS

PROJECT NUMBER: 3415.00

SHEET NUMBER: 7 OF 9

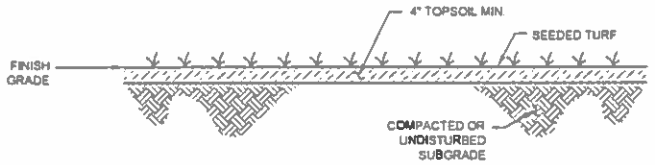

LOAM AND SEED

1

NOT TO SCALE

WARM SEASON GRASSES

MIXTURE	POUNDS PER ACRE
SWITCH GRASS - TRAILBLAZER OR PATHFINDER	6
BIG BLUESTEM - NIAGRA OR KAW	4
LITTLE BLUESTEM - ALDOUS, CAMPER, OR BLAZE	2
SAND LOVEGRASS - BEND OR NE-27	4
TOTAL	15

SPECIFICATIONS

TOPSOIL AND SEEDING MATERIALS

A. TOPSOIL SHALL BE FERTILE SOIL CAPABLE OF SUSTAINING VIGOROUS PLANT GROWTH, FREE FROM STONES, ROOTS, STICKS, PEAT, WEEDS, AND SOD GREATER THAN 3 INCHES. IT SHALL NOT CONTAIN MATERIAL HARMFUL TO PLANT GROWTH.

B. FERTILIZER SHALL BE LOW PHOSPHATE AND SLOW RELEASE NITROGEN AND APPLIED UNIFORMLY OVER THE DISTURBED AREA AT A RATE OF ELEVEN (11) POUNDS PER 1,000 SQUARE FEET (500 POUNDS PER ACRE). LIME SHOULD BE APPLIED AT A RATE OF 1 TON PER ACRE (50 POUNDS PER 1,000 SQUARE FEET).

C. GRASS SHALL BE FROM THE SAME OR PREVIOUS YEAR'S CROP. EACH VARIETY OF SEED SHALL HAVE A PERCENTAGE OF GERMINATION NOT LESS THAN NINETY (90), A PERCENTAGE OF PURITY NOT LESS THAN EIGHTY-FIVE (85), AND SHALL HAVE NOT MORE THAN ONE PERCENT (1%) WEED CONTENT.

D. MULCH SHALL CONSIST OF DRY STRAW AND BE FREE OF NOXIOUS WEEDS. MULCH SHALL BE APPLIED AT A RATE OF AT LEAST 1.5 TO 2 TONS PER ACRE.

E. APPLICATION OF FERTILIZER, LIME, SEED, AND MULCH SHALL ONLY BE PERFORMED DURING THOSE PERIODS WITHIN THE SEASONS WHICH ARE NORMAL FOR SUCH WORK AS DETERMINED BY THE WEATHER AND LOCALLY ACCEPTED PRACTICE. SEEDING WITHIN THE BORROW AREAS SHALL BE COMPLETED AFTER SNOWMELT BUT BEFORE MAY 15, CONSISTENT WITH GUIDANCE PUBLISHED IN "VEGETATING NEW HAMPSHIRE SAND AND GRAVEL PITS" TECHNICAL NOTE PM-NH-21 PREPARED BY THE USDA NATURAL RESOURCE CONSERVATION SERVICE DATED APRIL 2000.

F. ANY PART OF THE SEEDED AREA WHICH FAILS TO YIELD AN ACCEPTABLE STAND OF GRASS AFTER TWO MONTHS AS DETERMINED BY THE OWNER SHALL BE RETREATED WITH ADDITIONAL SEED, FERTILIZER, AND MULCH.

G. REED CANARY GRASS IS A PROBLEMATIC SPECIES AND SHALL NOT BE USED ON THIS PROJECT.

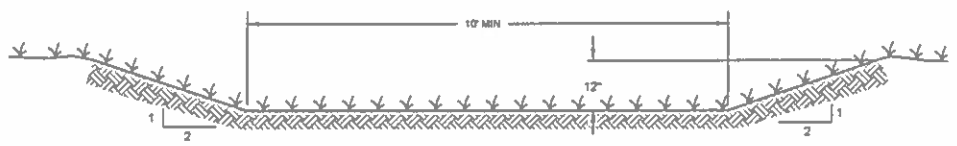

EMERGENCY SPILLWAY

2

NOT TO SCALE

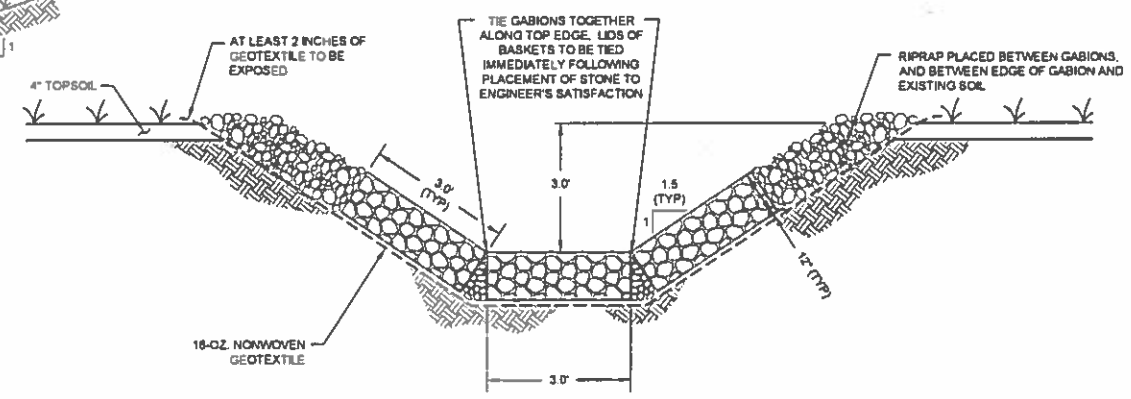

GABION DOWNCHUTE

4

NOT TO SCALE

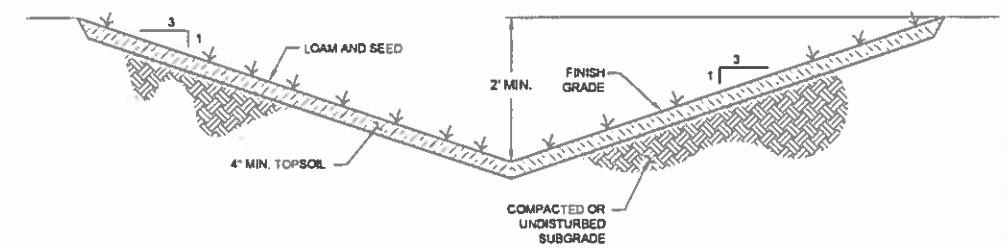

GRASS-LINED SWALE

5

NOT TO SCALE

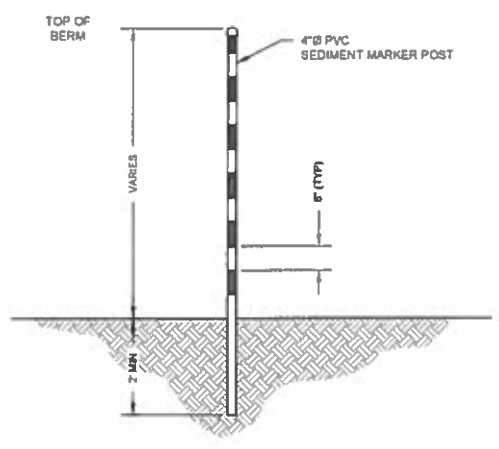

FOREBAY SEDIMENT MARKER

3

NOT TO SCALE

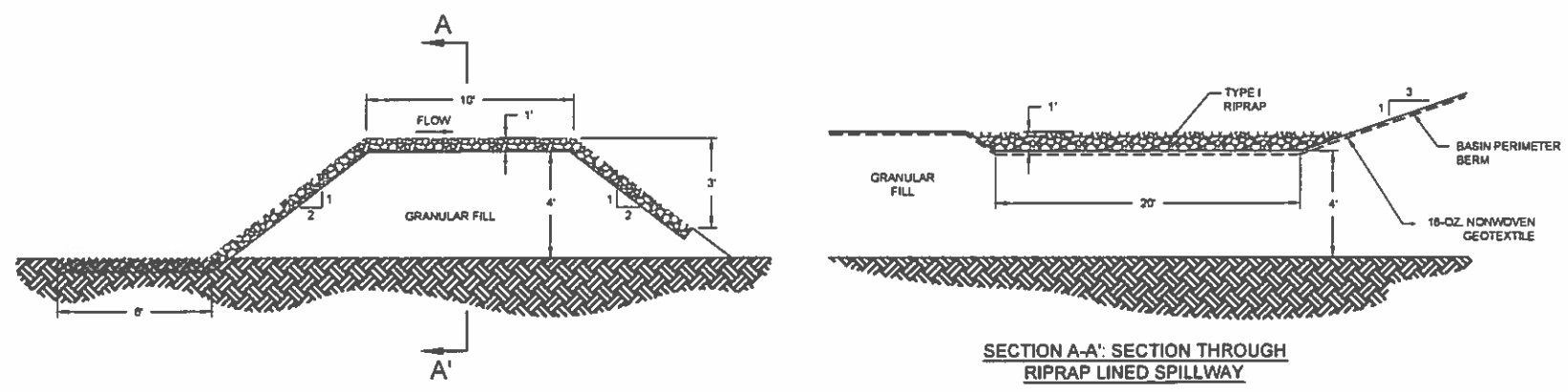

SECTION A-A': SECTION THROUGH RIPRAP LINED SPILLWAY

INTERIOR BASIN BERM DETAIL

6

NOT TO SCALE

FOR MORE INFORMATION ABOUT THESE PLANS, CONTACT THE CITY OF ROCHESTER PLANNING DEPARTMENT, 31 WAKEFIELD STREET, ROCHESTER, NH 03867 (603) 335-1338.

ROCHESTER PLANNING BOARD
APPROVAL CERTIFIED BY: DATE:

SANBORN HEAD

SCALE AS NOTED

THE STATE OF NEW HAMPSHIRE R. SCOTT SHILLABER No. 8775 PROFESSIONAL ENGINEER

NO.	DATE	DESCRIPTION	BY

DRAWN BY: R. CLAY
DESIGNED BY: R. CLAY
REVIEWED BY: K.E. SCHLOSSER
PROJECT MGR: K.E. SCHLOSSER
PIC: R.S. SHILLABER
DATE: APRIL 2013

BORROW AREA 6E & 6W PROJECT
TURNKEY RECYCLING & ENVIRONMENTAL ENTERPRISE
WASTE MANAGEMENT OF NEW HAMPSHIRE, INC.
ROCHESTER, NEW HAMPSHIRE

DETAILS

PROJECT NUMBER: 3415.00

SHEET NUMBER: 8 OF 9

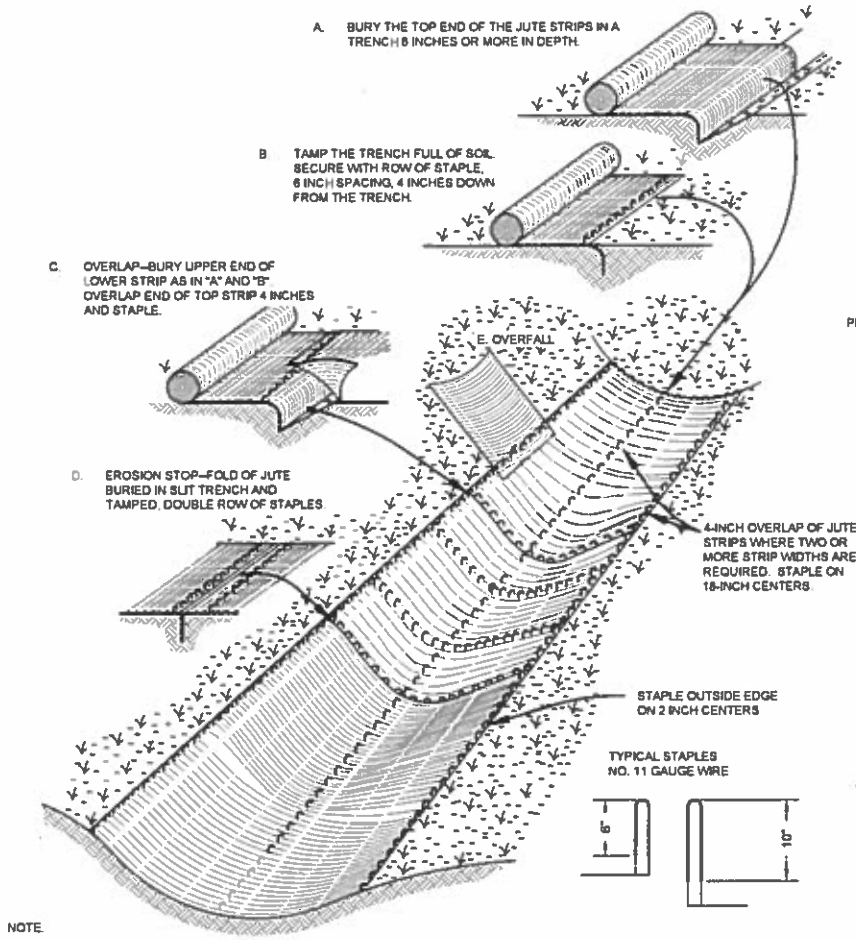

NOTE:

1. THIS DETAIL IS BASED ON FIGURE 7-85 – DETAIL FOR STABILIZING WITH JUTE MATTING, "STORMWATER MANAGEMENT AND EROSION AND SEDIMENT CONTROL HANDBOOK FOR URBAN AND DEVELOPING AREA IN NEW HAMPSHIRE", AUGUST 1992 AKA "THE GREEN BOOK", PG. 7-241. ORIGINAL SOURCE: USDA SOIL CONSERVATION SERVICE.

EROSION CONTROL BLANKET INSTALLATION DETAIL

1

NOT TO SCALE

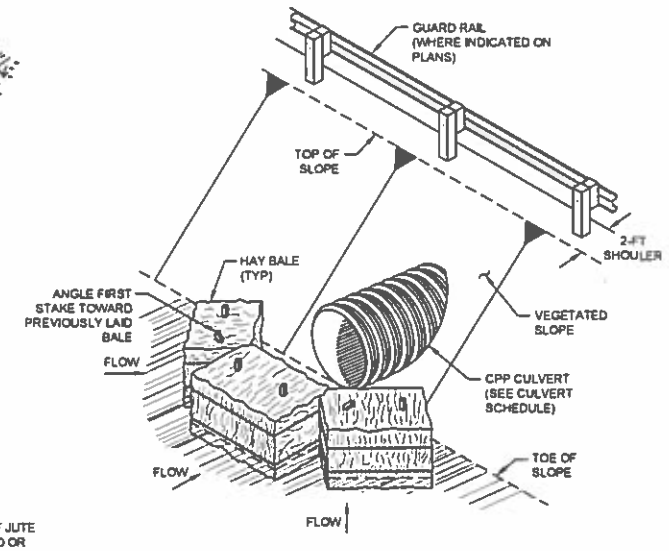

INSTALLATION
(ISOMETRIC VIEW)

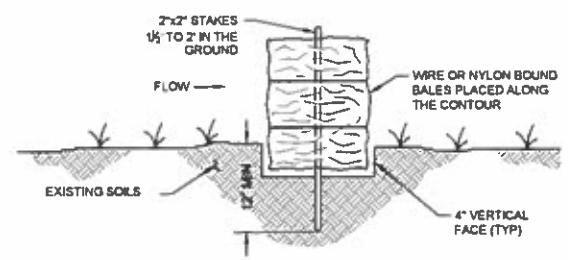

ANCHORING
(ELEVATION VIEW)

TEMPORARY HAY BALE INLET PROTECTION DETAIL

2

NOT TO SCALE

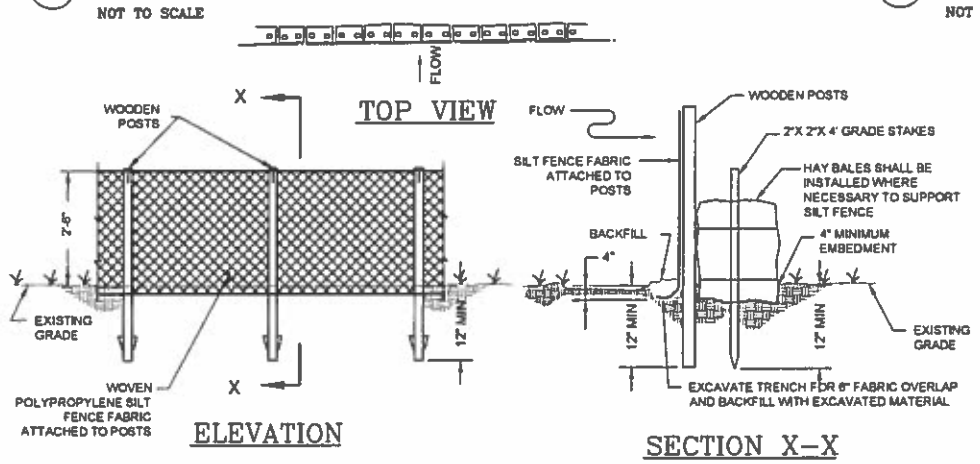

TYPICAL SILT FENCE DETAIL

3

NOT TO SCALE

FOR MORE INFORMATION ABOUT THESE PLANS, CONTACT THE CITY OF ROCHESTER PLANNING DEPARTMENT, 31 WAKEFIELD STREET, ROCHESTER, NH 03867 (603) 335-1338.

ROCHESTER PLANNING BOARD
APPROVAL CERTIFIED BY: DATE:

GENERAL EROSION & SEDIMENT CONTROL NOTES:

1. PERIMETER CONTROLS SHALL BE INSTALLED PRIOR TO EARTH MOVING OPERATIONS.
2. THE SMALLEST PRACTICAL AREA SHALL BE DISTURBED DURING CONSTRUCTION.
3. FOR AREAS TO BE STABILIZED, THE TERM "STABLE" SHALL BE DEFINED AS MEETING ONE OF THE FOLLOWING CRITERIA:
   A. A MINIMUM OF 85 PERCENT VEGETATED GROWTH HAS BEEN ESTABLISHED;
   B. A MINIMUM THICKNESS OF 3 INCHES OF NON-EROSIVE MATERIAL SUCH AS STONE HAS BEEN INSTALLED; OR
   C. EROSION CONTROL BLANKETS HAVE BEEN PROPERLY INSTALLED.
4. ALL DRAINAGE SWALES AND THE BASIN SHALL BE STABILIZED PRIOR TO DIRECTING RUNOFF TO THEM.
5. APPLY SEED, LIME, FERTILIZER, AND CLEAN STRAW MULCH TO DISTURBED AREAS, NEWLY-PLACED FILL SLOPES, AND GRASS-LINED SWALES WITHIN SEVEN DAYS OF ACHIEVING FINAL GRADE. CLEAN STRAW MULCH SHALL BE APPLIED AT THE RATE OF 1.5 TO 2 TONS PER ACRE. WITHIN BORROW AREAS THAT REACH FINAL GRADES, THIS WILL BE COMPLETED ON AN ANNUAL BASIS.
6. SILT FENCE/HAY BALES OR FILTER BERM SHALL BE INSTALLED AT THE DISCRETION OF THE ENGINEER. SILT FENCE/HAY BALES OR FILTER BERMS SHALL BE INSTALLED ALONG THE CONTOUR AND TOED UPSLOPE. SILT FENCE/HAY BALES OR FILTER BERMS ARE TO BE MAINTAINED AND CLEANED UNTIL VEGETATIVE COVER IS ESTABLISHED.
7. TRACK UP AND DOWN REGRADED SLOPES (GROUSER TRACKS PERPENDICULAR TO THE SLOPE) WITH A BULLDOZER TO LIMIT EROSION.
8. REMOVE SEDIMENT BUILD UP FROM THE STORMWATER BASIN AND FOREBAY AS NEEDED TO MAINTAIN STORAGE CAPACITY.
9. REMOVE SEDIMENT BUILD UP FROM BEHIND EROSION AND SEDIMENT CONTROL DEVICES. MAINTAIN TEMPORARY EROSION AND SEDIMENT CONTROL DEVICES UNTIL FULL ESTABLISHMENT OF PERMANENT GROUND COVER.
10. FUGITIVE DUST TO BE CONTROLLED IN ACCORDANCE WITH ENV-A 1000.
11. EROSION AND SEDIMENT CONTROLS SHALL BE MAINTAINED, REPAIRED, ADJUSTED, AND SUPPLEMENTED AS CONSTRUCTION AND WEATHER CONDITIONS REQUIRE.
12. EROSION AND SEDIMENT CONTROLS SHALL BE INSPECTED REGULARLY, BUT AT LEAST ON A WEEKLY BASIS AND BEFORE PREDICTED MAJOR STORMS. A MAJOR STORM IS DEFINED AS A STORM PREDICTED BY THE NATIONAL OFFICE OF ATMOSPHERIC ADMINISTRATION (NOAA) WEATHER SERVICE WITH WARNINGS OF FLOODING, SEVERE THUNDERSTORMS OR SIMILARLY SEVERE WEATHER CONDITIONS OR EFFECTS. MAKE NECESSARY REPAIRS PROMPTLY.
13. IF TEMPORARY STOCKPILES ARE CONSTRUCTED WITHIN THE BORROW AREAS, WIND EROSION CONTROLS (E.G., PLACEMENT OF TARPS, TEMPORARY SEEDING AND MULCH) SHALL BE INSTALLED AS NEEDED TO LIMIT THE POTENTIAL TO TRANSPORT SEDIMENT BEYOND THE INWARDLY DRAINING BORROW AREAS.
14. THE PROJECT SHALL MEET THE REQUIREMENTS AND CONTENT OF NH RSA 430:53 AND AGR 3800 RELATIVE TO INVASIVE SPECIES.

WINTER CONSTRUCTION NOTES:

1. IF WORK IS POSTPONED THROUGH WINTER, INSPECT EROSION AND SEDIMENT CONTROLS PRIOR TO THE END OF THE CONSTRUCTION SEASON AND MONTHLY THEREAFTER UNTIL WORK BEGINS IN THE SPRING.
2. IF WORK IS COMPLETED THROUGHOUT WINTER, AFTER EACH RAINFALL, SNOWSTORM, OR PERIOD OF THAWING OR RUNOFF, A VISUAL INSPECTION OF INSTALLED EROSION CONTROL MEASURES SHALL BE COMPLETED, WITH REPAIRS PERFORMED AS NEEDED. INSTALL ADDITIONAL EROSION AND SEDIMENT CONTROLS IF NEEDED TO MANAGE SNOWMELT RUNOFF.
3. WINTER CONSTRUCTION SHALL LIMIT THE MAXIMUM DISTURBED AREA TO THAT REQUIRED FOR BORROW ACTIVITIES.
4. PERMANENT SEEDING OF AREAS EXCAVATED TO PROPOSED GRADES SHALL BE COMPLETED AFTER SNOWMELT BUT BEFORE MAY 15.
5. SEDIMENT BARRIERS INSTALLED DURING FROZEN CONDITIONS SHALL CONSIST OF EROSION CONTROL MIX BERMS, OR CONTINUOUS CONTAINED BERMS. SILT FENCES AND HAY BALES SHALL NOT BE INSTALLED WHEN FROZEN CONDITIONS PREVENT PROPER EMBEDMENT OF THESE BARRIERS.
6. SNOW SHALL NOT BE PILED AT SILT FENCES, AND A 25 FOOT BUFFER SHALL BE MAINTAINED AROUND SILT FENCES TO ALLOW FOR REGULAR INSPECTION AND MAINTENANCE.
7. MULCHING APPLIED DURING FROZEN GROUND CONDITIONS SHALL BE ANCHORED. ANCHORED MULCH SHALL NOT BE APPLIED OVER SNOW OF GREATER THAN 1 INCH OF DEPTH.
8. FROZEN MATERIALS (E.G., FROST LAYER) REMOVED DURING WINTER CONSTRUCTION SHALL BE STOCKPILED SEPARATELY WITHIN THE BORROW AREA.
9. THE GRAVEL ACCESS ROAD SHALL BE MAINTAINED BY REMOVING EXCESS SNOW TO IMPROVE DRIVING CONDITIONS AS NEEDED. SNOW PLOWING OR REMOVAL ACTIVITIES SHALL NOT RESULT IN THE REMOVAL OR DISPLACEMENT OF SOIL OR VEGETATION BEYOND THE GRAVEL ACCESS ROAD. IF SOIL OR VEGETATION IS ACCIDENTALLY REMOVED OR DISPLACED, THE AREAS SHALL BE REPAIRED AND STABILIZED IN THE SPRING IN NON-FROZEN GROUND CONDITIONS.
10. GRAVEL SHALL BE PLACED ON THE GRAVEL ACCESS ROAD AS NEEDED TO MAINTAIN SAFE DRIVING CONDITIONS.
11. IF EQUIPMENT OR VEHICLES OPERATING ON FROZEN ACCESS ROADWAYS SLIDE BEYOND THE LIMITS OF WORK, THE AREA SHALL BE STABILIZED AND REPAIRED WHEN THE GROUND THAWS.
12. DURING SPRING THAW, GRAVEL ACCESS ROADS SHALL BE MAINTAINED TO REPAIR RUTS OR DEPRESSED AREAS THAT MAY DEVELOP. CONSTRUCTION TRAFFIC SHALL BE RESTRICTED TO LOW GROUND PRESSURE EQUIPMENT.

ROCK REMOVAL NOTES:

1. IF MORE THAN 5,000 CUBIC YARDS ARE TO BE BLASTED, WMNH SHALL DEVELOP A GROUNDWATER QUALITY SAMPLING PROGRAM TO MONITOR FOR NITRATE AND NITRITE IN DRINKING WATER SUPPLY WELLS OR OTHER WELLS REPRESENTATIVE OF DRINKING WATER SUPPLY WELLS IN THE AREA. BASED ON A REVIEW OF THE NHDES ONESTOP DATABASE, THERE ARE FOUR DRINKING WATER WELLS LOCATED WITHIN 2,000 FEET OF THE PROPOSED BLASTING ACTIVITIES: WRB #203.0420 CITY OF ROCHESTER; WRB #203.0303 FLEMING; WRB #203.0126 BOUGIE & LABBE CONSTRUCTION, INC.; AND WRB #203.0005 DESMARDES.
2. THE FOLLOWING BEST MANAGEMENT PROCEDURES FOR BLASTING SHALL BE COMPLIED WITH:
   A. LOADING PRACTICES. THE FOLLOWING BLASTHOLE LOADING PRACTICES TO MINIMIZE ENVIRONMENTAL EFFECTS SHALL BE FOLLOWED:
      i. DRILLING LOGS SHALL BE MAINTAINED BY THE DRILLER AND COMMUNICATED DIRECTLY TO THE BLASTER. THE LOGS SHALL INDICATE DEPTHS AND LENGTHS OF VOIDS, CAVITIES, AND FAULT ZONES OR OTHER WEAK ZONES ENCOUNTERED AS WELL AS GROUNDWATER CONDITIONS.
      ii. EXPLOSIVE PRODUCTS SHALL BE MANAGED ON-SITE SO THAT THEY ARE EITHER USED IN THE BOREHOLE, RETURNED TO THE DELIVERY VEHICLE, OR PLACED IN SECURE CONTAINERS FOR OFF-SITE DISPOSAL.
      iii. SPILLAGE AROUND THE BOREHOLE SHALL EITHER BE PLACED IN THE BOREHOLE OR CLEANED UP AND RETURNED TO AN APPROPRIATE VEHICLE FOR HANDLING OR PLACEMENT IN SECURED CONTAINERS FOR OFF-SITE DISPOSAL.
      iv. LOADED EXPLOSIVES SHALL BE DETONATED AS SOON AS POSSIBLE AND SHALL NOT BE LEFT IN THE BLASTHOLES OVERNIGHT, UNLESS WEATHER OR OTHER SAFETY CONCERNS REASONABLY DICTATE THAT DETONATION SHOULD BE POSTPONED.
      v. LOADING EQUIPMENT SHALL BE CLEANED OFF-SITE WHERE WASTEWATER CAN BE PROPERLY CONTAINED AND HANDLED IN A MANNER THAT PREVENTS RELEASE OF CONTAMINANTS TO THE ENVIRONMENT.
      vi. EXPLOSIVES SHALL BE LOADED TO MAINTAIN GOOD CONTINUITY IN THE COLUMN LOAD TO PROMOTE COMPLETE DETONATION. INDUSTRY ACCEPTED LOADING PRACTICES FOR PRIMING, STEMMING, DECKING AND COLUMN RISE NEED TO BE ATTENDED TO.
   B. EXPLOSIVE SELECTION. THE FOLLOWING BMPS SHALL BE FOLLOWED TO REDUCE THE POTENTIAL FOR GROUNDWATER CONTAMINATION WHEN EXPLOSIVES ARE USED:
      i. EXPLOSIVE PRODUCTS SHALL BE SELECTED THAT ARE APPROPRIATE FOR SITE CONDITIONS AND SAFE BLAST EXECUTION.
      ii. EXPLOSIVE PRODUCTS SHALL BE SELECTED THAT HAVE THE APPROPRIATE WATER RESISTANCE FOR THE SITE CONDITIONS PRESENT TO MINIMIZE THE POTENTIAL FOR HAZARDOUS EFFECT OF THE PRODUCT UPON GROUNDWATER.
   C. PREVENTION OF MISFIRES. APPROPRIATE PRACTICES SHALL BE DEVELOPED AND IMPLEMENTED TO PREVENT MISFIRES.
   D. MUCK PILE MANAGEMENT. MUCK PILES (THE BLASTED PIECES OF ROCK) AND ROCK PILES SHALL BE MANAGED IN A MANNER TO REDUCE THE POTENTIAL FOR CONTAMINATION BY IMPLEMENTING THE FOLLOWING MEASURES:
      i. REMOVE THE MUCK PILE FROM THE BLAST AREA AS SOON AS REASONABLY POSSIBLE.
      ii. MANAGE THE INTERACTION OF BLASTED ROCK PILES AND STORMWATER TO PREVENT CONTAMINATION OF WATER SUPPLY WELLS OR SURFACE WATER.
   E. SPILL PREVENTION MEASURES AND SPILL MITIGATION. SPILL PREVENTION AND SPILL MITIGATION MEASURES SHALL BE IMPLEMENTED TO PREVENT THE RELEASE OF FUEL AND OTHER RELATED SUBSTANCES TO THE ENVIRONMENT. THE MEASURES SHALL INCLUDE AT A MINIMUM:
      i. THE FUEL STORAGE REQUIREMENTS SHALL INCLUDE:
         1. STORAGE OF REGULATED SUBSTANCES ON AN IMPERVIOUS SURFACE;
         2. SECURE STORAGE AREAS AGAINST UNAUTHORIZED ENTRY;
         3. LABEL REGULATED CONTAINERS CLEARLY AND VISIBLY;
         4. INSPECT STORAGE AREAS WEEKLY;
         5. COVER REGULATED CONTAINERS IN OUTSIDE STORAGE AREAS;
         6. WHEREVER POSSIBLE, KEEP REGULATED CONTAINERS THAT ARE STORED OUTSIDE MORE THAN 50 FEET FROM SURFACE WATER AND STORM DRAINS, 75 FEET FROM PRIVATE WELLS, AND 400 FEET FROM PUBLIC WELLS; AND
         7. SECONDARY CONTAINMENT IS REQUIRED FOR CONTAINERS CONTAINING REGULATED SUBSTANCES STORED OUTSIDE, EXCEPT FOR ON PREMISE USE HEATING FUEL TANKS, OR ABOVEGROUND OR UNDERGROUND STORAGE TANKS OTHERWISE REGULATED.
      ii. THE FUEL HANDLING REQUIREMENTS SHALL INCLUDE:
         1. EXCEPT WHEN IN USE, KEEP CONTAINERS CONTAINING REGULATED SUBSTANCES CLOSED AND SEALED;
         2. PLACE DRIP PANS UNDER SPIGOTS, VALVES, AND PUMPS;
         3. HAVE SPILL CONTROL AND CONTAINMENT EQUIPMENT READILY AVAILABLE IN ALL WORK AREAS;
         4. USE FUNNELS AND DRIP PANS WHEN TRANSFERRING REGULATED SUBSTANCES; AND
         5. PERFORM TRANSFERS OF REGULATED SUBSTANCES OVER AN IMPERVIOUS SURFACE.
      iii. THE TRAINING OF ON-SITE EMPLOYEES AND THE ON-SITE POSTING OF RELEASE RESPONSE INFORMATION DESCRIBING WHAT TO DO IN THE EVENT OF A SPILL OF REGULATED SUBSTANCES.
      iv. FUELING AND MAINTENANCE OF EXCAVATION, EARTHMOVING AND OTHER CONSTRUCTION RELATED EQUIPMENT WILL COMPLY WITH THE REGULATIONS OF THE NEW HAMPSHIRE DEPARTMENT OF ENVIRONMENTAL SERVICES [NOTE THESE REQUIREMENTS ARE SUMMARIZED IN WD-DWGB-22-6 BEST MANAGEMENT PRACTICES FOR FUELING AND MAINTENANCE OF EXCAVATION AND EARTHMOVING EQUIPMENT" OR ITS SUCCESSOR DOCUMENT. (SEE HTTP://DES.NH.GOV/ORGANIZATION/COMMISSIONER/PIP/FACTSHEETS/DWGB/DOCUMENTS/DWGB-22-6.PDF)

SANBORN HEAD

SCALE AS NOTED

THE STATE OF NEW HAMPSHIRE
R. SCOTT SHILLABER
No. 8775
LICENSED
PROFESSIONAL ENGINEER

NO.	DATE	DESCRIPTION	BY

DRAWN BY: R. CLAY
DESIGNED BY: R. CLAY
REVIEWED BY: K.E. SCHLOSSER
PROJECT MGR: K.E. SCHLOSSER
PIC: R.S. SHILLABER
DATE: APRIL 2013

BORROW AREA 6E & 6W PROJECT
TURNKEY RECYCLING & ENVIRONMENTAL ENTERPRISE
WASTE MANAGEMENT OF NEW HAMPSHIRE, INC.
ROCHESTER, NEW HAMPSHIRE

DETAILS

PROJECT NUMBER: 3415.00

SHEET NUMBER: 9 OF 9