Amendment to Approved Project

City of Rochester, New Hampshire

Case # 125-198-R2-22 Property Address 9 ACADEMY STREET

Type of project: Site Plan X; Subdivision ___; Lot Line Adjustment ___; Other ___

Project name MILLSTONE PLACE

Date of original Planning Board approval 7/11/22

Description of amendment CONVERSION OF EXISTING SINGLE FAMILY HOUSE TO FOUR DWELLING UNITS AND CONSTRUCTION OF TWO NEW TRIPLEXES. PREVIOUS APPROVED DESIGN INCLUDED AN ADDITION OF TWO DWELLING UNITS TO THE EXISTING SINGLE FAMILY HOUSE AND TWO NEW TRIPLEXES.

Would this affect a wetland or wetland buffer or require a conditional use? Yes ___ No X

Applicant Name: KOZBRO LLC

Mailing Address: 17 MORNING FOREST CT, THE WOODLANDS, TX 77381

Phone Number: 603-781-1124 Email Address: KOZ@FASTMAIL.COM

Please note: *There is a $125.00 fee for amendments. They are reviewed by the Planning Board and a public hearing is held. Abutters must be renotified by the applicant. The applicant must submit any supplementary materials necessary to explain and support the amendment, such as a narrative and plans. This form, the abutter's list, the fee, and other necessary materials must be submitted by the applicable deadline date.*

Name of applicant or agent filling out this form KRYSTIAN KOZLOWSKI

Please check box: Applicant ☒ Agent ☒

Signature of person completing form: [signature] Date: 17-MAY-23

Signature of property owner (if different): [signature] Date: 05/17/2023

KOZBRO LLC

May 23, 2023

City of Rochester
Attn: Mr. Robert May
Planning Board Vice Chairman
Planning Department
33 Wakefield St.
Rochester, NH 03867

Re: Modification to Residential Site Plan Application for Proposed Multi-Family Project
9 Academy Street, Map 125, Lot 198

Dear Mr. May,

On behalf of our client, Krzysztof and Renata Kozlowski (Owner), KOZBRO LLC submits to the City of Rochester a modification request to the application approved by Planning Board on July, 11, 2022.

Please note KozBro Development Company previous prepared applications as Applicant/Agent for this project and will be operating as KOZBRO LLC going forward.

Background and General Narrative

The project site is located at 9 Academy Street and is 53,075 square feet (SF) in size. The existing conditions plan with topographic features was compiled by Northam Survey LLC. The site contains a "four-square" style single family house and two car garage. In the front, there is one driveway cut on Academy Street. The site contains a large yard that is open with vegetated areas. The existing boundary line to the west contains large trees. A wooden fence exists along the entire boundary line. In the rear, there is a 20,161 SF area with a 23-space parking lot. The parking lot is accessed from lot frontage on South Main Street. This parking area is leased to the City of Rochester for use by patrons of the Public Library under a current lease agreement with the Owner. The City's Attorney maintains a copy of this lease agreement. The lease permits use of all 23 parking spaces by the Owner. The site is serviced by municipal water and sewer.

The Proposal

The applicant is requesting approval for nine additional dwelling units so that the site contains a total of ten units. The proposal includes conversion of the existing single-family house to a quad-plex by modifying the interior space of the existing house. In addition, two free standing tri-plexes are proposed on the site. Each dwelling unit has three bedrooms and 1,410 SF total finished space. A site plan showing the placement of the buildings on the lot is included.

In terms of context to the surrounding area, the buildings were designed to fit the neighborhood from a bulk and space standpoint. No changes to the façade are anticipated with the exception of a staircase at the rear of the building. The proposed freestanding tri-plexes have been designed as stout two-story buildings. The modern design, materials, and colors compliment the surroundings without over powering the area. The contrasting style is reinforced by the significant setback from Academy Street. Additionally, the proposed modern style resembles the new building planned at 38 Charles Street (see Attachment A). The project site directly abuts 38 Charles Street.

KOZBRO LLC 17 MORNING FOREST CT. THE WOODLANDS, TX 77381 (603)-781-1124 KOZ@FASTMAIL.COM

The site plan design considers the transect of the area, specifically:

- The buildings are placed to use the irregular lot area efficiently and increase density,
- The design facilitates access to public infrastructure including the Public Library (375' away), Service Credit Union (300' away), and COAST bus stop (400' away),
- Proposed walkways are concrete pavement,
- The large vegetation and trees along the perimeter will be maintained as much as possible to preserve natural buffers in this area.
- The existing lot has an open park-like yard that is preserved by the proposed placement of the buildings.

In developing the site in this way, the spirit of the downtown residential zone is better adhered to. This development increases density within the urban core without sacrificing the visual appeal of Academy Street.

We reviewed the abutting land uses and unit development to determine if the addition of the eight units is appropriate for the area. The following is a list of abutting properties on the street and the general density found in the area:

- 6-8 Academy Street contains 2 units on approximately 4,792 SF
- 7 Academy Street contains 2 units on approximately 6,098 SF
- 10 Academy Street contains 4 units on approximately 4,792 SF
- 12 Academy Street contains 2 units on approximately 1,742 SF
- 14 Academy Street contains 3 units on approximately 12,197 SF
- 15 Academy Street contains 2 units on approximately 5,227 SF
- 16 Academy Street contains 4 units on approximately 12,632 SF
- 17 Academy Street contains 2 units on approximately 10,454 SF
- 30 Charles Street contains 3 units on approximately 10,019 SF
- 34 Charles Street contains 1 unit on approximately 9,148 SF
- 36 Charles Street contains 2 units on approximately 10,454 SF
- 38 Charles Street will contain 9 units on approximately 19,602 SF

Our assessment of the neighborhood found that on average each lot contains 3 units. For abutting properties, we found the average lot size is approximately 8,930 SF and the average density is 1 unit for 2,977 SF. The proposed development has a density of 1 unit for 5,308 SF.

The existing site is relatively flat with total existing impervious cover equal to 18,545 SF (34.9%). The proposed building impervious cover is 4,294 SF (8.1%) and the proposed paved impervious area is 997 SF (1.9%). The proposed site plan was designed to reduce the impact of disturbance and grading requirements. Additional stormwater runoff from the proposed construction will be insignificant and will infiltrate into the greenspace surrounding the buildings.

Sprinkler systems designed according to NFPA 13R are planned for the proposed buildings. The existing house has an NFPA 13 system. The nearest existing fire hydrants are located at 26 Academy Street and adjacent to 90 South Main Street. Fire protection system requirements will be coordinated with the Rochester Fire Department.

Please do not hesitate to contact me should you have any questions.

Sincerely,

Krystian Kozlowski, P.E.
KOZBRO LLC

Attachment A – 38 Charles Street Hope on Haven Hill by Market Square Architects

PROPOSED MULTI-FAMILY RESIDENCES
"MILLSTONE PLACE"
9 ACADEMY STREET

TABLE OF CONTENTS

SHEET 1	C-1	EXISTING CONDITIONS
SHEET 2	C-2	DEMOLITION PLAN
SHEET 3	C-3	SITE PLAN
SHEET 4	C-4	FIRE DEPARTMENT COMPLIANCE PLAN
SHEET 5	C-5	UTILITY PLAN
SHEET 6	C-6	UTILITY DETAILS
SHEET 7	C-7	GRADING PLAN
SHEET 8	C-8	LANDSCAPING AND LIGHTING PLAN
SHEET 9	A-0	ELEVATIONS BUILDING 2 & 3

ABBREVIATIONS

AC.	ACRE
C.L.	CENTER LINE
D.T.C.	DOWN TOWN COMMERCIAL
F.F.	FINISHED FLOOR
F.P.	FOOTPRINT
I.P.	IRON PIPE
L.F.	LINEAR FEET
O.H.U.	OVERHEAD UTILITIES
O.C.	ON CENTER
S.G.C.	SLOPED GRANITE CURB
S.F.	SQUARE FEET
S.C.R.D.	STRAFFORD COUNTY REGISTRY OF DEEDS
TYP.	TYPICAL
U.G.E.	UNDERGROUND ELECTRIC UTILITIES
V.I.F.	VERIFY IN FIELD
'/,	FEET/FEET

OWNER: KRZYSZTOF & RENATA KOZLOWSKI
9 ACADEMY STREET
ROCHESTER, NH 03867

APPLICANT: KOZBRO LLC
17 MORNING FOREST CT
THE WOODLANDS, TX 77381

ENGINEER OF RECORD: KRYSTIAN KOZLOWSKI, P.E. NH 14195
603-781-1124
KOZ@FASTMAIL.COM

GENERAL NOTES;

1. LATEST EDITION OF THE FOLLOWING CODES SHALL APPLY:
   - A. 2015 INTERNATIONAL RESIDENTIAL CODE,
   - B. 2015 INTERNATIONAL BUILDING CODE,
   - C. CITY OF ROCHESTER, NH GOVERNING ORDIANCE,
   - D. ANY OTHER FEDERAL, STATE, COUNTY, OR LOCAL GOVERNING CODES.

   IN CASE OF CONFLICT, THE MOST STRINGENT CODE SHALL APPLY.
2. THESE DOCUMENTS ARE INTENDED FOR ONE-TIME USE BY A PROFESSIONAL CONTRACTOR.

VICINITY SKETCH
SCALE: 1' = 1000' +/-

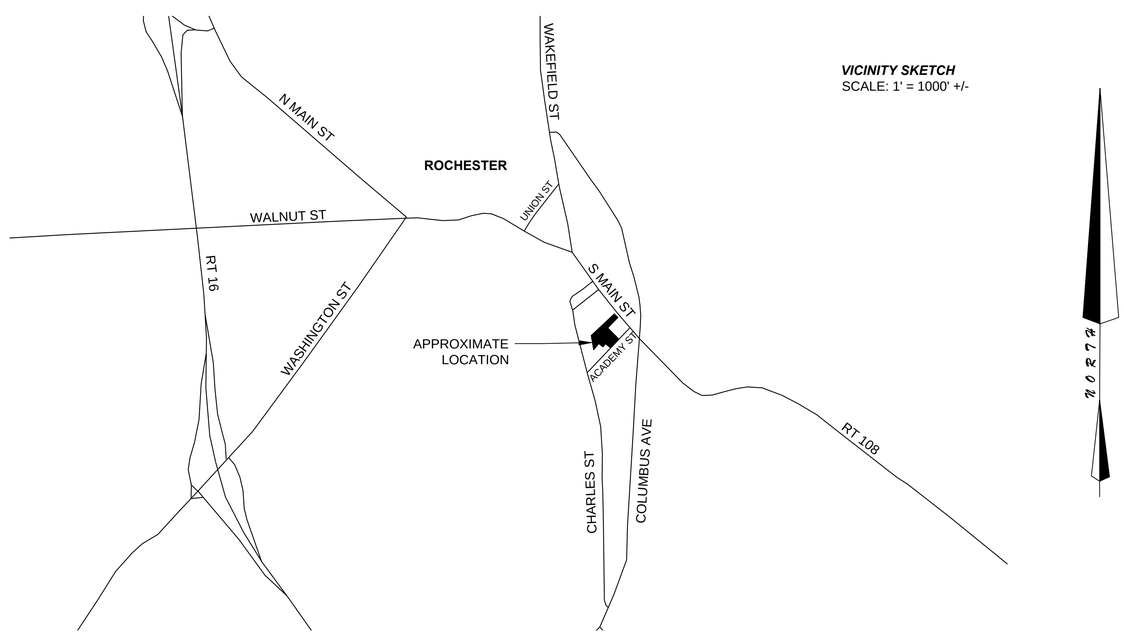

GENERAL PLAN SET NOTES:

1. 11X17" PLANS ARE HALF THE PUBLISHED SCALE.
2. ALL PLANS ARE CONSIDERED NOT FOR CONSTRUCTION UNLESS THEY CONTAIN THE APPROVAL STAMP OF THE CITY OF ROCHESTER.

FINAL APPROVAL BY ROCHESTER PLANNING BOARD

CERTIFIED BY_____DATE_____

REV. No.	DESCRIPTION	DATE
4	FOR APPROVAL	5-23-23
3	FOR APPROVAL	7-11-22
2	FOR APPROVAL	6-14-22
1	FOR APPROVAL	5-17-22
0	FOR REVIEW	2-22-22

REVISIONS

KOZBRO LLC

STATE OF NEW HAMPSHIRE
KRYSTIAN E. KOZLOWSKI No. 14195 LICENSED
PROFESSIONAL ENGINEER

FOR PERMITTING ONLY

TITLE SHEET

LAND OF
KRZYSZTOF & RENATA KOZLOWSKI
9 ACADEMY STREET
ROCHESTER, NH
TAX MAP 125, LOT 198

DRAWING NO.	REV.
C-0	4

CAD SCALE	AS NOTED	TITLE SHEET
ORIGINAL SIZE	ANSI D	

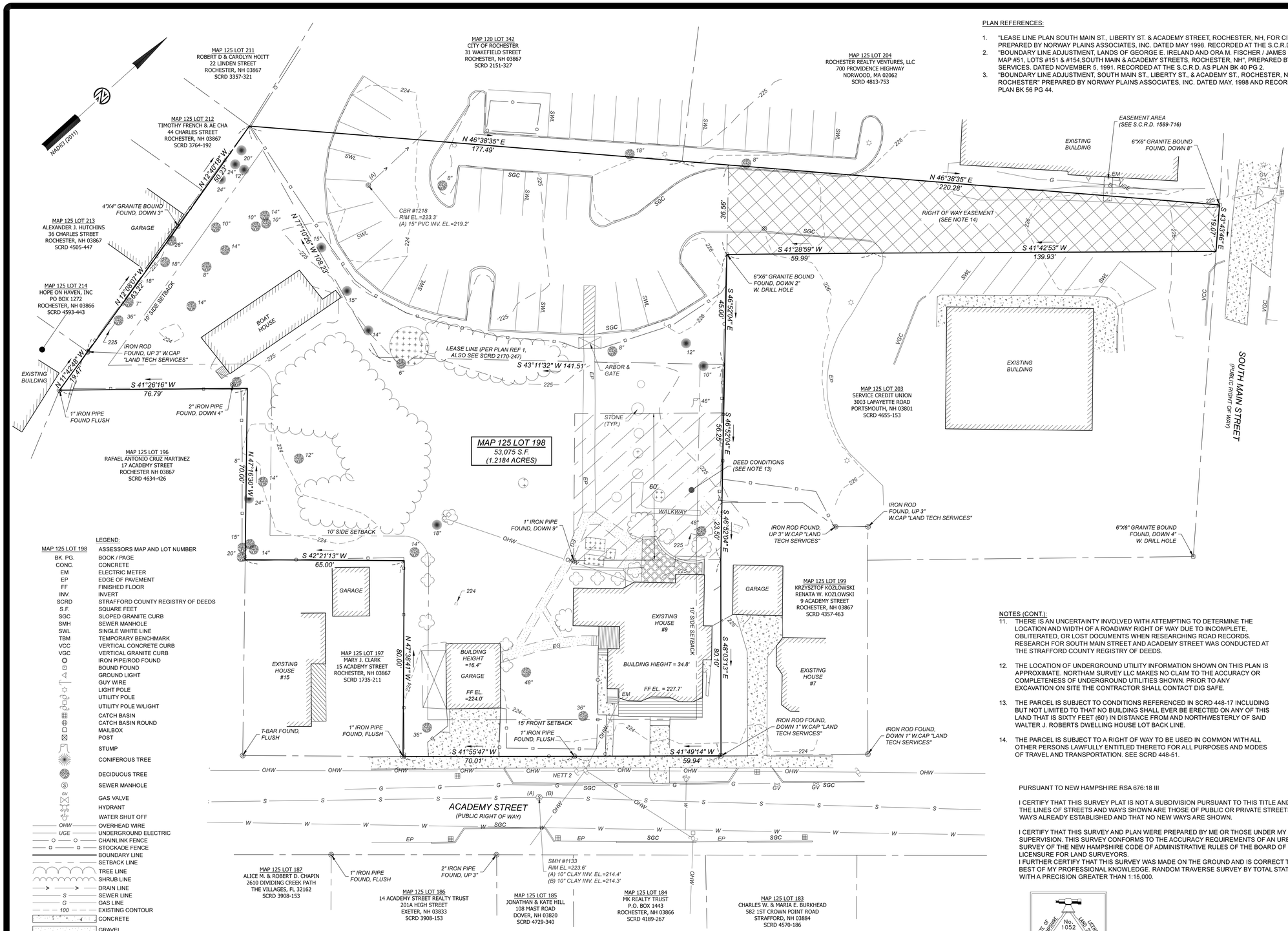

PLAN REFERENCES:

1. "LEASE LINE PLAN SOUTH MAIN ST., LIBERTY ST. & ACADEMY STREET, ROCHESTER, NH, FOR CITY OF ROCHESTER", PREPARED BY NORWAY PLAINS ASSOCIATES, INC. DATED MAY 1998. RECORDED AT THE S.C.R.D. AS PLAN BK 56 PG 43.
2. "BOUNDARY LINE ADJUSTMENT, LANDS OF GEORGE E. IRELAND AND ORA M. FISCHER / JAMES E. FISHER TRUST, TAX MAP #51, LOTS #151 & #154,SOUTH MAIN & ACADEMY STREETS, ROCHESTER, NH", PREPARED BY LAND TECHNICAL SERVICES. DATED NOVEMBER 5, 1991. RECORDED AT THE S.C.R.D. AS PLAN BK 40 PG 2.
3. "BOUNDARY LINE ADJUSTMENT, SOUTH MAIN ST., LIBERTY ST., & ACADEMY ST., ROCHESTER, N.H. FOR CITY OF ROCHESTER" PREPARED BY NORWAY PLAINS ASSOCIATES, INC. DATED MAY, 1998 AND RECORDED AT THE S.C.R.D. AS PLAN BK 56 PG 44.

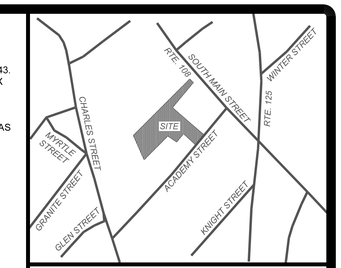

LOCUS

NOTES:

1. SUBJECT PARCEL: TAX MAP 125 LOT 198
   9 ACADEMY STREET
   ROCHESTER, NH 03820
   NS PROJECT #352
2. OWNER OF RECORD: KRZYSZTOF S. & RENATA W. KOZLOWSKI
   9 ACADEMY STREET
   ROCHESTER, NH 03820
   S.C.R.D. BOOK 2515, PAGE 6
3. PARCEL AREA: 53,075 S.F. OR 1.2184 AC
4. DIMENSIONAL REQUIREMENTS:

DIMENSIONAL REQUIREMENTS:	ZONE: R2*
MIN LOT AREA:	30,000 S.F.
MIN LOT FRONTAGE:	100'
MIN LOT AREA/ DWELLING UNIT:	5,000 S.F. OR 7,500 S.F.
MIN FRONT SETBACK:	15'
MIN SIDE/REAR SETBACK	10'/25'
MAX BUILDING FOOTPRINT:	30%
MAX LOT COVERAGE:	60%
MAX BUILDING HEIGHT:	35'

*FIVE- OR MORE FAMILY

ZONING INFORMATION SHOWN HEREON IS PER THE TOWN OF ROCHESTER, NH ZONING ORDINANCE DATED NOVEMBER 1, 2018, THE LAND OWNER IS RESPONSIBLE FOR COMPLYING WITH ALL APPLICABLE TOWN, STATE, AND FEDERAL REGULATIONS.

5. FLOOD HAZARD ZONE: "X" "AREAS DETERMINED TO BE OUTSIDE THE 0.2% ANNUAL CHANCE FLOODPLAIN.", PER FIRM MAP #33017CO211D, WITH AN EFFECTIVE DATE OF MAY 17, 2005.
6. THE INTENT OF THIS PLAN IS TO SHOW THE LOCATION OF BOUNDARIES IN ACCORDANCE WITH THE CURRENT LEGAL DESCRIPTIONS. IT IS NOT AN ATTEMPT TO DEFINE UNWRITTEN RIGHTS, DETERMINE THE EXTENT OF OWNERSHIP, OR DEFINE THE LIMITS OF TITLE.
7. FIELD SURVEY COMPLETED BY NORTHAM SURVEY LLC IN APRIL 2022 USING A TRIMBLE S5 TOTAL STATION WITH A TRIMBLE TSC3 DATA COLLECTOR, A TRIMBLE R12 GPS RECEIVER AND A SOKKIA B31 AUTO LEVEL.
8. HORIZONTAL DATUM IS NAD83(2011) NEW HAMPSHIRE STATE PLANE COORDINATES PER STATIC GPS OBSERVATIONS.
9. THE VERTICAL DATUM IS NAVD88 PER STATIC GPS OBSERVATIONS.
10. EASEMENTS, RIGHTS, AND RESTRICTIONS SHOWN OR IDENTIFIED ARE THOSE WHICH WERE FOUND DURING RESEARCH PERFORMED AT THE STRAFFORD COUNTY REGISTRY OF DEEDS. OTHER RIGHTS, EASEMENTS, OR RESTRICTIONS MAY EXIST WHICH A TITLE EXAMINATION OF SUBJECT PARCEL(S) WOULD DETERMINE.

NOTES (CONT.):

11. THERE IS AN UNCERTAINTY INVOLVED WITH ATTEMPTING TO DETERMINE THE LOCATION AND WIDTH OF A ROADWAY RIGHT OF WAY DUE TO INCOMPLETE, OBLITERATED, OR LOST DOCUMENTS WHEN RESEARCHING ROAD RECORDS. RESEARCH FOR SOUTH MAIN STREET AND ACADEMY STREET WAS CONDUCTED AT THE STRAFFORD COUNTY REGISTRY OF DEEDS.
12. THE LOCATION OF UNDERGROUND UTILITY INFORMATION SHOWN ON THIS PLAN IS APPROXIMATE. NORTHAM SURVEY LLC MAKES NO CLAIM TO THE ACCURACY OR COMPLETENESS OF UNDERGROUND UTILITIES SHOWN. PRIOR TO ANY EXCAVATION ON SITE THE CONTRACTOR SHALL CONTACT DIG SAFE.
13. THE PARCEL IS SUBJECT TO CONDITIONS REFERENCED IN SCRD 448-17 INCLUDING BUT NOT LIMITED TO THAT NO BUILDING SHALL EVER BE ERECTED ON ANY OF THIS LAND THAT IS SIXTY FEET (60') IN DISTANCE FROM AND NORTHWESTERLY OF SAID WALTER J. ROBERTS DWELLING HOUSE LOT BACK LINE.
14. THE PARCEL IS SUBJECT TO A RIGHT OF WAY TO BE USED IN COMMON WITH ALL OTHER PERSONS LAWFULLY ENTITLED THERETO FOR ALL PURPOSES AND MODES OF TRAVEL AND TRANSPORTATION. SEE SCRD 448-51.

LEGEND:

MAP 125 LOT 198	ASSESSORS MAP AND LOT NUMBER
BK. PG.	BOOK / PAGE
CONC.	CONCRETE
EM	ELECTRIC METER
EP	EDGE OF PAVEMENT
FF	FINISHED FLOOR
INV.	INVERT
SCRD	STRAFFORD COUNTY REGISTRY OF DEEDS
S.F.	SQUARE FEET
SGC	SLOPED GRANITE CURB
SMH	SEWER MANHOLE
SWL	SINGLE WHITE LINE
TBM	TEMPORARY BENCHMARK
VCC	VERTICAL CONCRETE CURB
VGC	VERTICAL GRANITE CURB
	IRON PIPE/ROD FOUND
	BOUND FOUND
	GROUND LIGHT
	GUY WIRE
	LIGHT POLE
	UTILITY POLE
	UTILITY POLE W/LIGHT
	CATCH BASIN
	CATCH BASIN ROUND
	MAILBOX
	POST
	STUMP
	CONIFEROUS TREE
	DECIDUOUS TREE
	SEWER MANHOLE
GV	GAS VALVE
	HYDRANT
	WATER SHUT OFF
OHW	OVERHEAD WIRE
UGE	UNDERGROUND ELECTRIC
	CHAINLINK FENCE
	STOCKADE FENCE
	BOUNDARY LINE
	SETBACK LINE
	TREE LINE
	SHRUB LINE
	DRAIN LINE
S	SEWER LINE
G	GAS LINE
100	EXISTING CONTOUR
	CONCRETE
	GRAVEL
	LANDSCAPING
	WOODEN DECK
	SLATE PATIO
	ACCESS & UTILITY EASEMENT

PURSUANT TO NEW HAMPSHIRE RSA 676:18 III

I CERTIFY THAT THIS SURVEY PLAT IS NOT A SUBDIVISION PURSUANT TO THIS TITLE AND THAT THE LINES OF STREETS AND WAYS SHOWN ARE THOSE OF PUBLIC OR PRIVATE STREETS OR WAYS ALREADY ESTABLISHED AND THAT NO NEW WAYS ARE SHOWN.

I CERTIFY THAT THIS SURVEY AND PLAN WERE PREPARED BY ME OR THOSE UNDER MY DIRECT SUPERVISION. THIS SURVEY CONFORMS TO THE ACCURACY REQUIREMENTS OF AN URBAN SURVEY OF THE NEW HAMPSHIRE CODE OF ADMINISTRATIVE RULES OF THE BOARD OF LICENSURE FOR LAND SURVEYORS.
I FURTHER CERTIFY THAT THIS SURVEY WAS MADE ON THE GROUND AND IS CORRECT TO THE BEST OF MY PROFESSIONAL KNOWLEDGE. RANDOM TRAVERSE SURVEY BY TOTAL STATION WITH A PRECISION GREATER THAN 1:15,000.

STATE OF NEW HAMPSHIRE
No. 1052
ERIC J. SALOVITCH
LICENSED LAND SURVEYOR
SIGNATURE

LICENSED LAND SURVEYOR

MAY 11, 2022
DATE

EXISTING CONDITIONS
FOR
KRZYSZTOF S. & RENATA W. KOZLOWSKI
OF
TAX MAP 125 LOT 198
9 ACADEMY STREET
ROCHESTER, NEW HAMPSHIRE
COUNTY OF STRAFFORD

SCALE: 1"=20' (22x34) 1"=40' (11x17)

JOB NO.	352	DATE:	2022-05-02
DRAWN BY:	PJT	DRAWING:	352 SURVEY.DWG
CHECKED BY:	EJS	SHEET:	1 OF 1

NO.	DATE	DESCRIPTION	BY

NORTHAM SURVEY LLC
239 Long Hill Road, Dover, NH 03820 | (603) 953-3164 | www.northamsurvey.com

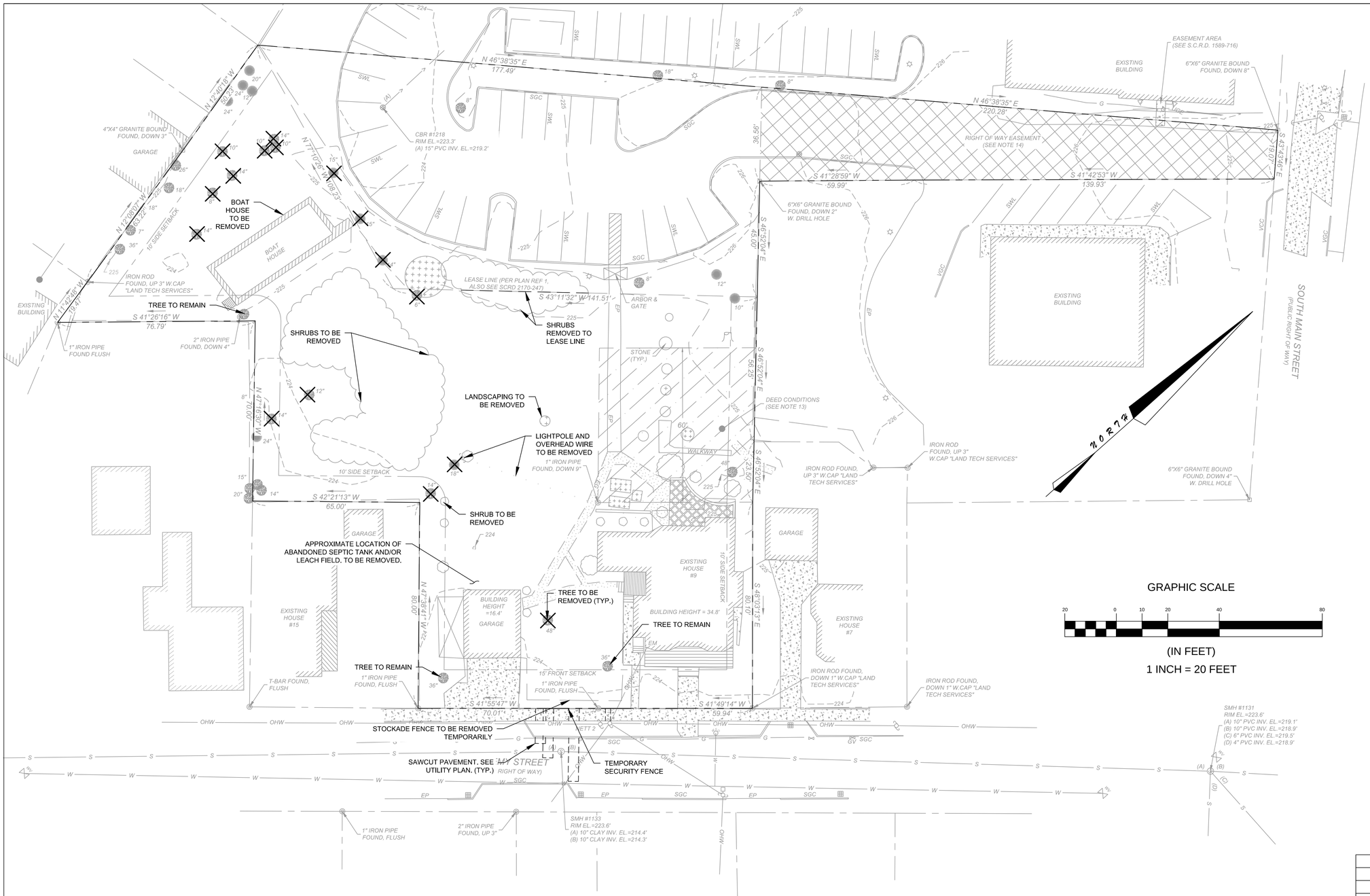

REV. No.	DESCRIPTION	DATE
3	FOR APPROVAL	5-23-23
2	FOR APPROVAL	7-11-22
1	FOR APPROVAL	6-14-22
0	FOR APPROVAL	5-17-22

REVISIONS

KOZBRO LLC

STATE OF NEW HAMPSHIRE
KRYSTIAN E. KOZLOWSKI
No. 14195
LICENSED
PROFESSIONAL ENGINEER

FOR PERMITTING ONLY

DEMOLITION PLAN

LAND OF
KRZYSZTOF & RENATA KOZLOWSKI
9 ACADEMY STREET
ROCHESTER, NH
TAX MAP 125, LOT 198

DRAWING NO.	REV.
C-2	3

CAD SCALE	1" = 20'	SHEET 2 OF 9
ORIGINAL SIZE	ANSI D	

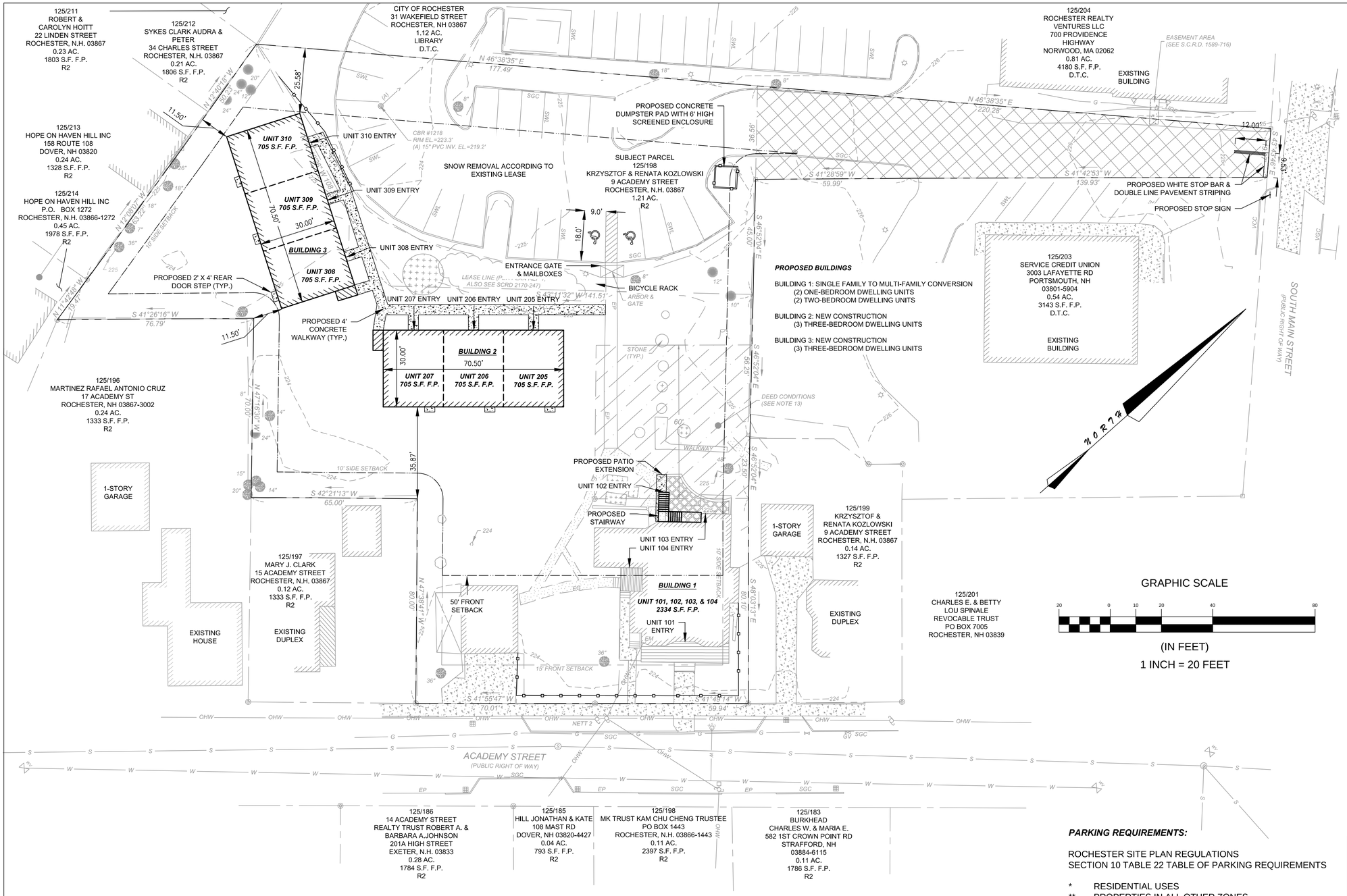

GRAPHIC SCALE

20 0 10 20 40 80

(IN FEET)

1 INCH = 20 FEET

NOTES:

1. OWNER: KRZYSZTOF & RENATA KOZLOWSKI
   9 ACADEMY STREET
   ROCHESTER, NH 03867
2. TAX MAP 125, LOT 198
3. LOT AREA: 53,075 S.F., 1.21 AC.
4. S.C.R.D. BOOK 2515, PAGE 6
5. ZONING: R-2 / ECONOMIC REVITALIZATION ZONE
   MINIMUM LOT AREA ~ 30,000 S.F.
   MINIMUM FRONTAGE ~ 100'
   MINIMUM LOT AREA / DWELLING UNIT ~ 5,000 S.F.
   FRONT SETBACK ~ 15.0' / 50.0'
   REAR SETBACK ~ 25.0'
   SIDE SETBACK ~ 10.0'
6. THE INTENT OF THIS PLAN IS TO SHOW THE PROPOSED SITE PLAN ELEMENTS ON TAX MAP 125, LOT 198.
7. THE EXISTING LOT BUILDING COVERAGE IS 3,166 S.F. (6.0%).
8. THE PROPOSED TOTAL LOT BUILDING COVERAGE IS 8,168.5 S.F. (15.4%).
9. ALL ON-SITE UTILITIES SHALL BE INSTALLED UNDERGROUND.
10. THE SUBJECT PARCEL IS SERVED BY MUNICIPAL WATER AND SEWER.
11. ALL MATERIALS AND CONSTRUCTION SHALL CONFORM TO APPLICABLE CITY AND STATE CODES.
12. APPROVED BACKFLOW PREVENTORS SHALL BE PROVIDED FOR BOTH FIRE AND DOMESTIC WATER LINES.
13. EROSION CONTROL BEST MANAGEMENT PRACTICES SHALL INCLUDE STRAW WATTLES, SEEDING, AND EROSION CONTROL BLANKETS (AS-NEEDED).
14. THE LIMITS OF CONSTRUCTION DISTURBANCE SHALL BE STAKED, FLAGGED, AND CLEARLY IDENTIFIED PRIOR TO THE COMMENCEMENT OF SITE WORK.
15. BUILDING ADDRESSES SHALL BE ASSIGNED BY THE BUILDING ASSESSOR.
16. THE FOLLOWING FEDERAL AND STATE PERMITS HAVE BEEN ISSUED FOR THE SUBJECT PROPERTY: NONE
17. THIS PLAN PROPOSES 8,515 +/- S.F. OF DISTURBANCE.
18. CALL DIG SAFE PRIOR TO BEGINNING WORK (1-888-344-7233).
19. ALL CONSTRUCTION SHALL CONFORM TO THE STATE OF NEW HAMPSHIRE DEPARTMENT OF TRANSPORTATION STANDARD SPECIFICATIONS FOR ROAD AND BRIDGE CONSTRUCTION. CONSTRUCTION SHALL ALSO CONFORM TO THE CITY OF ROCHESTER POLICIES AND PRACTICES.
20. WRITTEN DIMENSIONS ON THIS PLAN TAKE PRECEDENCE OVER SCALED DIMENSIONS. THE CONTRACTOR SHALL USE CAUTION WHEN SCALING REPRODUCED PLANS. IN THE EVENT OF A CONFLICT BETWEEN THIS PLAN SET AND ANY OTHER DRAWINGS AND/OR SPECIFICATIONS, THE ENGINEER SHALL BE NOTIFIED BY THE CONTRACTOR PRIOR TO CONSTRUCTION. CONTRACTOR TO CONFIRM ALL ELEVATIONS. CONFLICTS WILL BE REPORTED TO THE DESIGN ENGINEER PRIOR TO CONSTRUCTION.
21. THE SITE LAYOUT IS DESIGNED IN COMPLIANCE WITH APPLICABLE ACCESSIBILITY REGULATIONS. THE PROPOSED STRUCTURES WILL ALSO BE DESIGNED IN ACCORDANCE WITH APPLICABLE ACCESSIBILITY REGULATIONS.

NOTES (CONT.):

22. LIST ANY VARIANCES OR SPECIAL EXCEPTIONS GRANTED BY THE ZONING BOARD OF ADJUSTMENT: NONE
23. THE CONSTRUCTION HOURS SHALL BE LIMITED TO MONDAY-FRIDAY 7AM-6PM, SATURDAY 8AM-6PM WITH NO SUNDAY HOURS. HOURS OF CONSTRUCTION SHALL BE DOCUMENTED ON A SITE CONSTRUCTION SIGN ALONG WITH THE CONTACT INFORMATION FOR THE GENERAL CONTRACTOR.
24. FROM GROUND BREAKING THE SITE SHALL REMAIN ACCESSIBLE YEAR ROUND IN ALL WEATHER CONDITIONS.
25. SOLID WASTE WILL BE REMOVED FROM THE SITE VIA A SOLID WASTE PICKUP AREA.
26. EXISTING BUILDING ACCESS FROM THE EXISTING ENTRANCE LOCATIONS.

NOTES (CONT.):

27. LOT 198
    EXISTING BUILDING COVERAGE: 3,166 S.F. (6.0%)
    EXISTING PAVED IMPERVIOUS AREA: 15,379 S.F. (29.0%)
    TOTAL EXISTING IMPERVIOUS COVER: 18,545 S.F. (34.9%)
    PROPOSED BUILDING IMPERVIOUS AREA: 5,003 S.F. (9.4%)
    PROPOSED PAVED IMPERVIOUS AREA: 997 S.F. (1.9%)
    TOTAL PROPOSED IMPERVIOUS COVER IS 5,999 S.F.
28. FOR MORE INFORMATION ABOUT THIS SITE PLAN CONTACT KRYSTIAN KOZLOWSKI (603) 781-1124.

PARKING REQUIREMENTS:

ROCHESTER SITE PLAN REGULATIONS
SECTION 10 TABLE 22 TABLE OF PARKING REQUIREMENTS

* RESIDENTIAL USES
** PROPERTIES IN ALL OTHER ZONES
** 2 PARKING SPACES PER UNIT
** 10 UNITS x 2 SPACES = 20 SPACES REQ.

20 SPACES REQUIRED
25 SPACES PROVIDED (2 ON EXISTING DRIVEWAY AND 23 ON EXISTING PARKING LOT ACCORDING TO LEASE)

FINAL APPROVAL BY ROCHESTER PLANNING BOARD

CERTIFIED BY_____DATE_____

REV. No.	DESCRIPTION	DATE
4	FOR APPROVAL	5-23-23
3	FOR APPROVAL	7-11-22
2	FOR APPROVAL	6-14-22
1	FOR APPROVAL	5-17-22
0	FOR REVIEW	2-22-22

REVISIONS

KOZBRO LLC

STATE OF NEW HAMPSHIRE
KRYSTIAN E. KOZLOWSKI No. 14195 LICENSED
PROFESSIONAL ENGINEER

FOR PERMITTING ONLY

SITE PLAN

LAND OF
KRZYSZTOF & RENATA KOZLOWSKI
9 ACADEMY STREET
ROCHESTER, NH
TAX MAP 125, LOT 198

DRAWING NO. C-3 REV. 4

CAD SCALE 1" = 20'
ORIGINAL SIZE ANSI D

SHEET 3 OF 9

30 FT BUILDING SEPARATION DISTANCE

15 FT BUILDING SEPARATION DISTANCE

ACCESS ROUTE DISTANCE TO FARTHESTMOST EXTERIOR WALL 260FT

1-STORY GARAGE 512 S.F.

LIMITS OF FIRE RESISTANT SIDING

10' SIDE SETBACK

UNIT 310 ENTRY

CBR #1218
RIM EL.=223.3'
(A) 15" PVC INV. EL.=219.2'

UNIT 309 ENTRY

UNIT 308 ENTRY

UNIT 310
705 S.F. F.P.

UNIT 309
705 S.F. F.P.

BUILDING 3

UNIT 308
705 S.F. F.P.

FIRE APPARATUS

UNIT 207 ENTRY UNIT 206 ENTRY UNIT 205 ENTRY

ARBOR & GATE

PROPERTY LINE (TYP.)

NFPA 13 R SPRINKLER & FIRE ALARM ROOM

BUILDING 2

UNIT 207
705 S.F. F.P.

UNIT 206
705 S.F. F.P.

UNIT 205
705 S.F. F.P.

STONE (TYP.)

SOUTH MAIN STREET
(PUBLIC RIGHT OF WAY)

NORTH

30 FT BUILDING SEPARATION DISTANCE

10' SIDE SETBACK

35.53'

15 FT BUILDING SEPARATION DISTANCE

1-STORY GARAGE 330 S.F.

FIRE APPARATUS ACCESS ROUTE (TYP.)

WALKWAY

UNIT 102 ENTRY

UNIT 103 ENTRY
UNIT 104 ENTRY

BUILDING 1

UNIT A
2334 S.F.

UNIT 101, 102, 103, & 104
2334 S.F. F.P.

UNIT 101 ENTRY

14' SIDE SETBACK

ACCESS ROUTE DISTANCE TO FARTHESTMOST EXTERIOR WALL 177 FT

ACCESS ROUTE DISTANCE TO FARTHESTMOST EXTERIOR WALL 253 FT

EXISTING NFPA 13 ALARM PANEL

15' FRONT SETBACK

ADDITIONAL FIRE DEPARTMENT ACCESS POINT

FIRE APPARATUS

ACADEMY STREET
(PUBLIC RIGHT OF WAY)

SMH #1133
RIM EL.=223.6'
(A) 10" CLAY INV. EL.=214.4'
(B) 10" CLAY INV. EL.=214.3'

SMH #1131
RIM EL.=223.6'
(A) 10" PVC INV. EL.=219.1'
(B) 10" PVC INV. EL.=218.9'
(C) 6" PVC INV. EL.=219.5'
(D) 4" PVC INV. EL.=218.9'

GRAPHIC SCALE

20 0 10 20 40 80

(IN FEET)

1 INCH = 20 FEET

REV. No.	DESCRIPTION	DATE
3	FOR APPROVAL	5-23-23
2	FOR APPROVAL	7-11-22
1	FOR APPROVAL	6-14-22
0	FOR APPROVAL	5-17-22

REVISIONS

KOZBRO LLC

FIRE DEPARTMENT COMPLIANCE PLAN

LAND OF
KRZYSZTOF & RENATA KOZLOWSKI
9 ACADEMY STREET
ROCHESTER, NH
TAX MAP 125, LOT 198

STATE OF NEW HAMPSHIRE
KRYSTIAN E. KOZLOWSKI
No. 14195
LICENSED
PROFESSIONAL ENGINEER

FOR PERMITTING ONLY

DRAWING NO. C-4

REV. 3

CAD SCALE 1" = 20'

ORIGINAL SIZE ANSI D

SHEET 4 OF 9

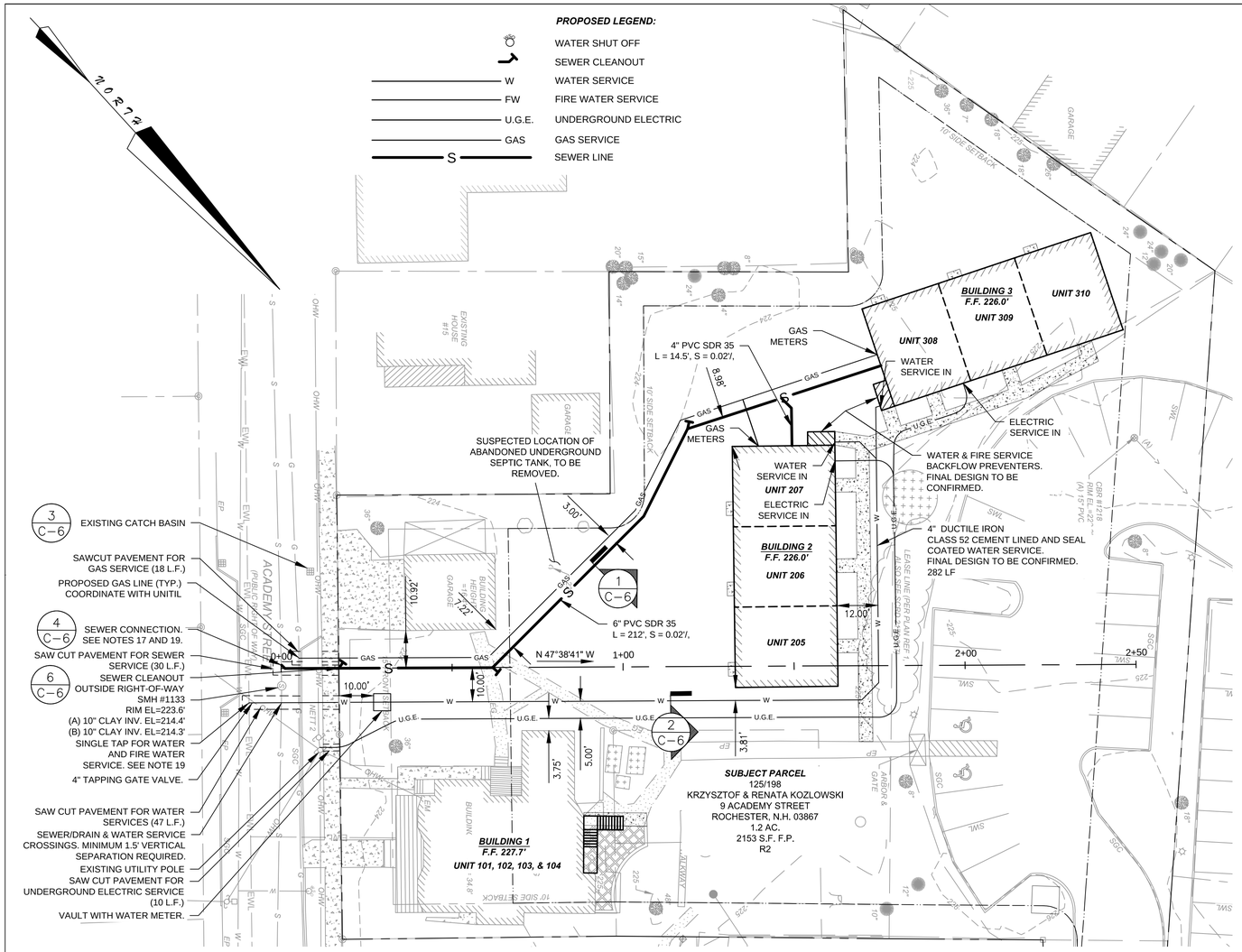

GRAPHIC SCALE

(IN FEET)

1 INCH = 20 FEET

VERTICAL SCALE: 1" = 8'

PLAN VIEW

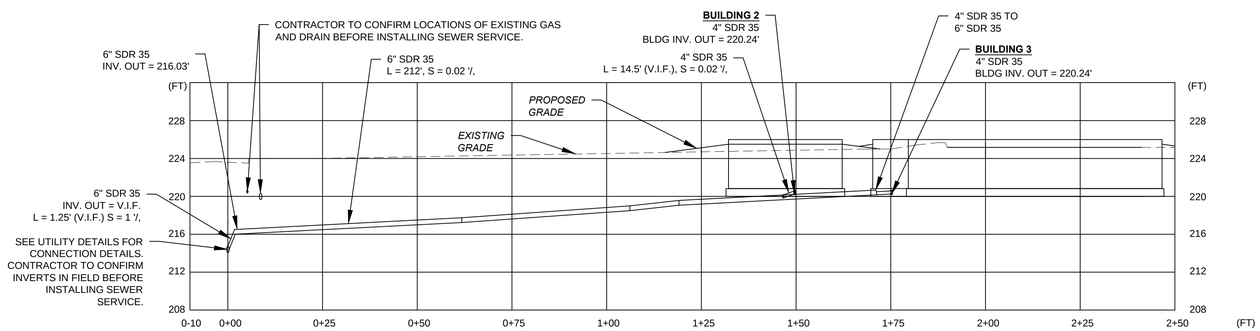

PROPOSED SEWER SERVICE PROFILE

NOTES:

1. THE PURPOSE OF THIS PLAN IS TO SHOW THE PROPOSED UTILITIES WITHIN THE PROJECT AREA.
2. UNDERGROUND UTILITY LOCATIONS ARE BASED UPON BEST AVAILABLE EVIDENCE AND ARE NOT FIELD VERIFIED. LOCATING AND PROTECTING ANY ABOVE AND BELOW GROUND UTILITIES IS THE SOLE RESPONSIBILITY OF THE CONTRACTOR. ANY UTILITY CONFLICTS SHOULD BE REPORTED IMMEDIATELY TO THE ENGINEER. IT SHALL BE THE SOLE RESPONSIBILITY OF THE CONTRACTOR TO REPAIR ANY DAMAGE TO THE EXISTING UTILITIES.
3. THE CONTRACTOR SHALL CALL AND COORDINATE WITH DIGSAFE 1-888-344-7233 AT LEAST 72 HOURS PRIOR TO COMMENCING ANY EXCAVATION ON PUBLIC OR PRIVATE PROPERTY.
4. PROTECTION OF SUBGRADE: THE CONTRACTOR SHALL BE REQUIRED TO MAINTAIN STABLE, DEWATERED SUBGRADES, TRENCHES, AND OTHER AREAS DURING CONSTRUCTION. SUBGRADE DISTURBANCE MAY BE INFLUENCED BY EXCAVATION METHODS, MOISTURE, PRECIPITATION, GROUNDWATER CONTROL, AND CONSTRUCTION ACTIVITIES. THE CONTRACTOR SHALL TAKE PRECAUTIONS TO PREVENT SUBGRADE DISTURBANCE. SUCH PRECAUTIONS MAY INCLUDE DIVERTING STORMWATER RUNOFF AWAY FROM CONSTRUCTION AREAS, REDUCING TRAFFIC IN SENSITIVE AREAS, AND MAINTAINING AN EFFECTIVE DEWATERING PROGRAM. SOILS EXHIBITING HEAVING OR INSTABILITY SHALL BE OVER EXCAVATED TO MORE COMPETENT BEARING SOIL AND REPLACED WITH FREE DRAINING STRUCTURAL FILL MEETING THE ENGINEERS SPECIFIC RECOMMENDED CRITERIA.
5. IF THE EARTHWORK IS PERFORMED DURING FREEZING WEATHER, EXPOSED SUBGRADES ARE SUSCEPTIBLE TO FROST. NO FILL OR UTILITIES SHALL BE PLACED ON FROZEN GROUND. THIS WILL LIKELY REQUIRE REMOVAL OF A FROZEN SOIL CRUST AT THE COMMENCEMENT OF OPERATIONS EACH DAY. THE FINAL SUBGRADE ELEVATION WOULD ALSO REQUIRE AN APPROPRIATE DEGREE OF INSULATION AGAINST FREEZING. DELETERIOUS MATERIALS SUCH AS ICE, VEGETATION, AND ROCKS OR CLUMPS GREATER THAN 3" IN DIAMETER SHALL BE REMOVED FROM FILL MATERIAL PRIOR TO COMPACTION AND PLACEMENT OF SUBSEQUENT LIFTS.
6. PLACEMENT OF BORROW MATERIALS SHALL BE PERFORMED IN A MANNER THAT PREVENTS LONG TERM DIFFERENTIAL SETTLEMENT. EXCESSIVELY WET MATERIALS SHALL BE STOCKPILED AND ALLOWED TO DRAIN BEFORE PLACEMENT. FROZEN MATERIAL SHALL NOT BE USED FOR CONSTRUCTION. VOIDS BETWEEN STONES AND CLUMPS OF MATERIAL SHALL BE FILLED WITH FINE MATERIALS.
7. FINAL UTILITY LOCATIONS TO BE COORDINATED BETWEEN THE CONTRACTOR, ALL APPROPRIATE UTILITY COMPANIES, AND THE ROCHESTER DPW.
8. CONTRACTOR TO CONTACT ROCHESTER DPW A MINIMUM OF TWO WEEKS PRIOR TO ANY CONSTRUCTION TO COORDINATE ALL WORK CONCERNING INSTALLATION OF ANY PROPOSED WATER LINE IMPROVEMENTS.
9. ALL WATER MAIN AND SERVICE INSTALLATIONS SHALL CONFORM TO THE CITY OF ROCHESTER STANDARDS. ALL HIGHWAY CONSTRUCTION WILL MEET THE CITY OF ROCHESTER STANDARDS.
10. CONTRACTOR SHALL COORDINATE ALL ELECTRICAL INSTALLATIONS WITH EVERSOURCE (800) 662-7764. ALL ELECTRIC CONDUIT INSTALLATION SHALL BE INSPECTED BY EVERSOURCE PRIOR TO BACKFILL. A 48-HOUR MINIMUM NOTICE IS REQUIRED.
11. ALL SEWER INSTALLATIONS SHALL CONFORM TO THE REQUIREMENTS OF NHDES & ROCHESTER DPW SEWER DIVISION STANDARDS. ALL PVC SEWER PIPE IS TO CONFORM WITH ENV-WQ 704.05 (c)-(e) AND CONFORM WITH ASTM D3034. PVC JOINT SEALS SHALL CONFORM WITH ASTM D3121.
12. CONTRACTOR SHALL COORDINATE ALL TELECOMMUNICATIONS INSTALLATIONS WITH FAIRPOINT COMMUNICATIONS AT (603) 427-5525.
13. CONTRACTOR SHALL COORDINATE ALL CABLE INSTALLATIONS WITH METROCAST.
14. CONTRACTOR SHALL COORDINATE ALL GAS INSTALLATIONS WITH UNITIL.
15. ALL WATER SERVICES ARE TO BE WITNESSED WITH A 2"X4" PAINTED BLUE. ALL SEWER SERVICES ARE TO BE WITNESSED WITH A 2'X4' PAINTED YELLOW, STUBBED PRIOR TO BUILDING CONSTRUCTION.
16. CURB BOXES SHOULD BE PLACED IN THE LAWN AREA, OR IF PLACED IN PAVEMENT, A ROAD BOX IS REQUIRED.
17. THE SHOWN LOCATION AND DEPTH OF THE EXISTING SEWER SERVICE ARE BASED ON CITY OF ROCHESTER DPW RECORDS. THE EXACT LOCATION AND DEPTH TO BE CONFIRMED BEFORE CONSTRUCTION.
18. ENTITIES SUCH AS COMPANIES AND MUNICIPALITIES, AND PERSONS ENGAGED IN ASBESTOS ABATEMENT PROJECTS MUST BE LICENSED AND CERTIFIED BY THE DES ASBESTOS CONTROL PROGRAM. AN ENTITY LICENSE IS NOT REQUIRED FOR MINOR AND SMALL-SCALE. SHORT-DURATION ACTIVITIES. HOWEVER, THE INDIVIDUALS INVOLVED MUST STILL HAVE THE APPROPRIATE LEVEL OF CERTIFICATION FOR THE ACTIVITY AND JOB TASK. THE CERTIFICATION IS TO ASSURE THAT PERSONS PERFORMING ASBESTOS WORK ARE SUITABLY QUALIFIED AND HAVE SUFFICIENT KNOWLEDGE AND ABILITY TO PERFORM THEIR JOB TASKS WITHOUT RISK TO THEMSELVES AND OTHERS. ALL ASBESTOS CONTAINING WASTE MATERIALS MUST BE PROPERLY IDENTIFIED, PACKAGED, AND DELIVERED TO A LANDFILL LICENSED BY THE DES SOLID WASTE MANAGEMENT PROGRAM FOR DISPOSAL. CALL (603) 271-2925 FOR MORE INFORMATION.
19. THE APPLICANT SHALL COORDINATE WITH ROCHESTER DPW TO PROVIDE WATER TAP WITH STUB AND SEWER WYE WITH STUB TO PROPERTY LINE IF ACADEMY STREET INFRASTRUCTURE IMPROVEMENT PROJECT PRECEDES CONSTRUCTION OF THIS PROJECT.

REV. No.	DESCRIPTION	DATE
4	FOR APPROVAL	5-23-23
3	FOR APPROVAL	7-11-22
2	FOR APPROVAL	6-14-22
1	FOR APPROVAL	5-17-22
0	FOR REVIEW	2-22-22

REVISIONS

KOZBRO LLC

STATE OF NEW HAMPSHIRE
KRYSTIAN E. KOZLOWSKI
No. 14195
LICENSED
PROFESSIONAL ENGINEER

FOR PERMITTING ONLY

UTILITY PLAN

LAND OF
KRZYSZTOF & RENATA KOZLOWSKI
9 ACADEMY STREET
ROCHESTER, NH
TAX MAP 125, LOT 198

DRAWING NO.	REV.
C-5	4

CAD SCALE	AS NOTED	SHEET 5 OF 9
ORIGINAL SIZE	ANSI D	

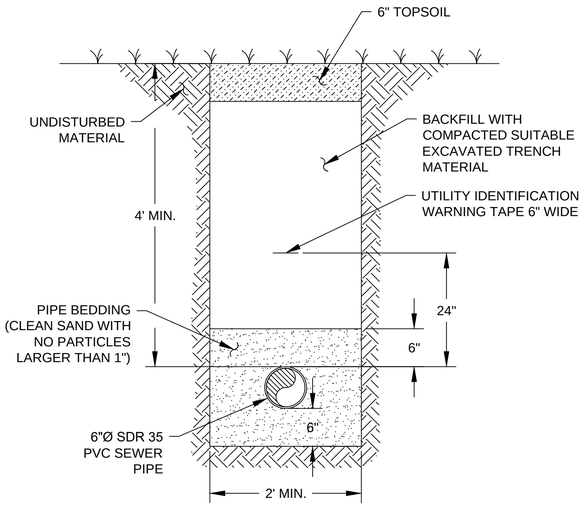

SEWER SERVICE TRENCH

1 NOT TO SCALE

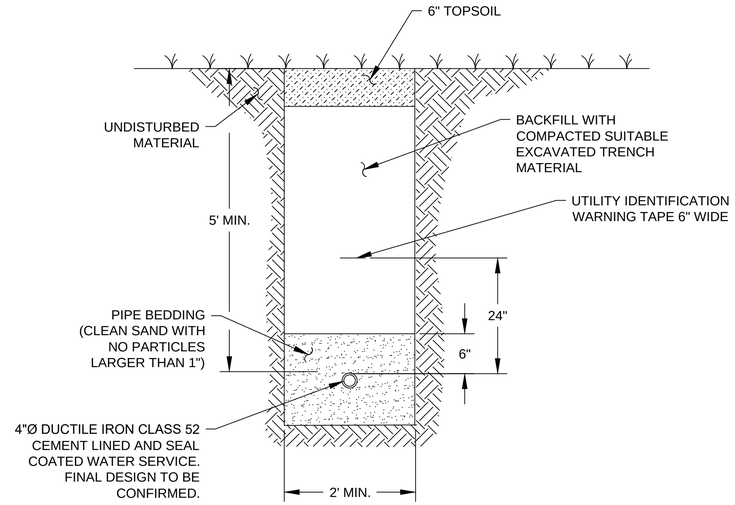

WATER SERVICE TRENCH

2 NOT TO SCALE

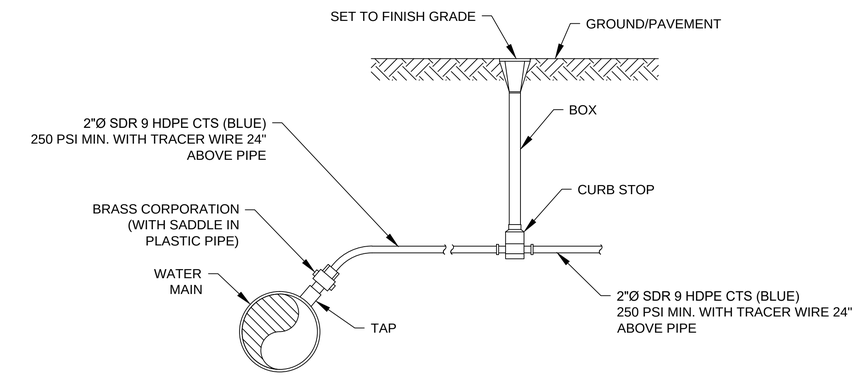

NOTES:

1. DETAILS AND INSTALLATION SHALL BE IN ACCORDANCE WITH THE CITY OF ROCHESTER STANDARDS OF INFRASTRUCTURE DESIGN, LATEST EDITION..
2. WHERE A WATER SERVICE CROSSES A SEWER MAIN, WATER SHALL PASS OVER THE SEWER AND MAINTAIN 18 INCHES OF SEPARATION WITH A MINIMUM COVER OF 4'.
3. WHERE SEPARATION AND MINIMUM COVER CANNOT BE MAINTAINED, CONSULT WITH ROCHESTER DPW FOR DESIGN ALTERATION.
4. CURB STOPS NOT TO BE SET IN DRIVEWAYS.
5. END OF INSTALLED WATER SERVICE TO BE MARKED WITH 2 X 4.

ELEVATION VIEW

WATER SERVICE CONNECTION

3 NOT TO SCALE

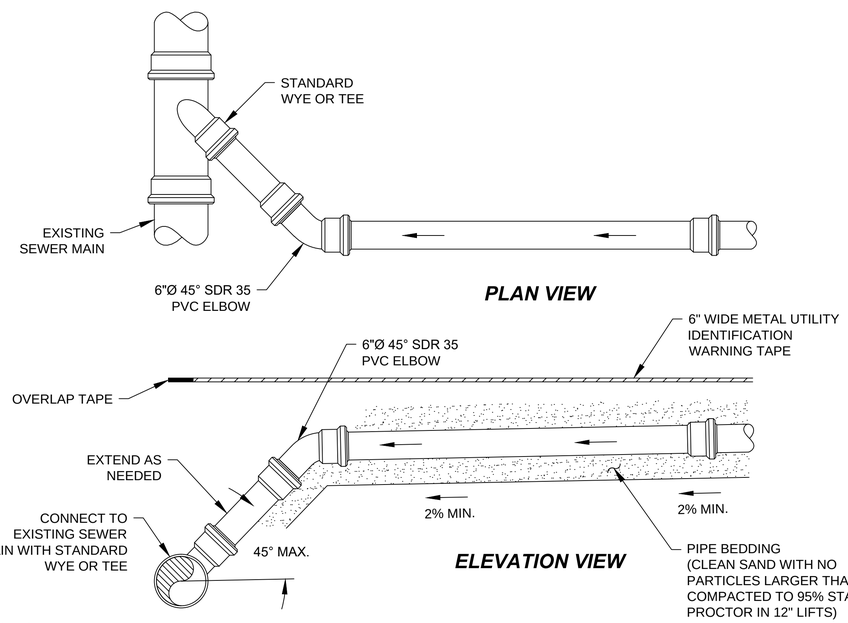

NOTES:

1. PROVIDE MAXIMUM 45° CONNECTION TO EXISTING SEWER MAIN. IN NO CASE SHALL THE CONNECTION BE MADE DIRECTLY ON TOP OF THE PIPE.
2. ALL JOINTS ON SEWER LATERAL SHALL BE COMPRESSION TYPE OR APPROVED SOLVENT WELD.
3. IF CONNECTION TO MAIN IS MADE PRIOR TO LATERAL INSTALLATION, LATERAL SHALL EXTEND BEYOND PROPERTY LINE AND BE CAPPED AND MARKED IN FIELD WITH 2 X 4.
4. DO NOT TAP HOLE AND INSERT LATERAL PIPE DIRECTLY INTO MAIN. ALL CONNECTIONS SHALL BE MADE USING A SADDLE OR WYE CUT IN. REVIEW DETAIL WITH ROCHESTER DPW PRIOR TO ORDERING MATERIALS.
5. SEWER LATERAL SHALL HAVE A 6" METAL TAPE WITH LETTERING INDICATING "SEWER" INSTALLED ABOVE THE ALIGNMENT OF THE NON-METALIC PIPE FROM SEWER MAIN TO PROPERTY LINE.

SEWER SERVICE CONNECTION

4 NOT TO SCALE

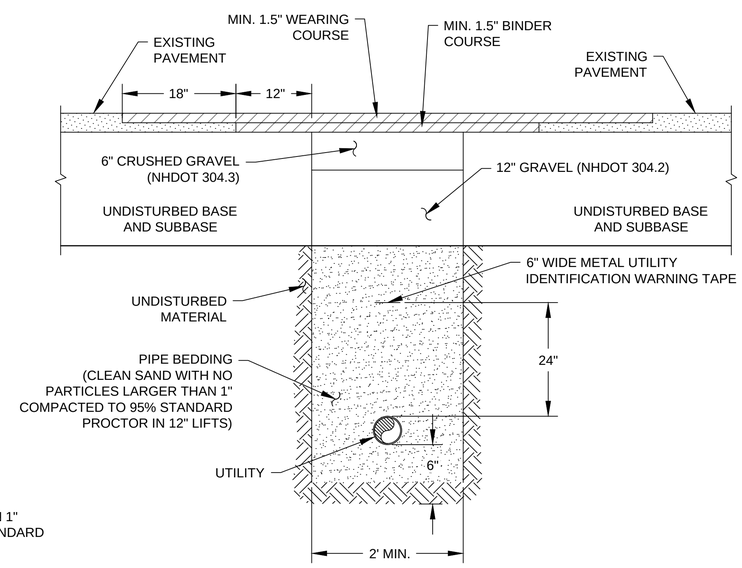

PAVEMENT PATCH

5 NOT TO SCALE

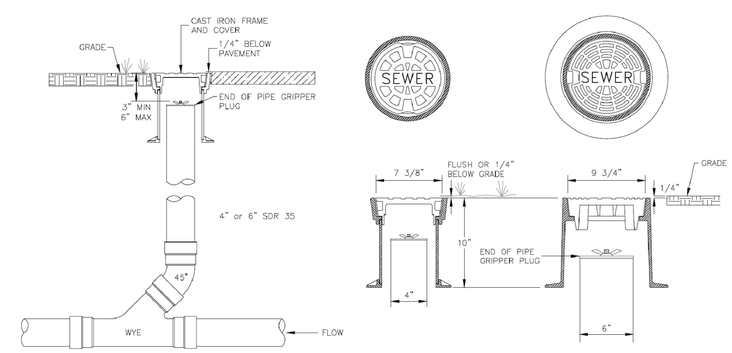

SEWER CLEANOUT DETAILS

6 NOT TO SCALE

REV. No.	DESCRIPTION	DATE
3	FOR APPROVAL	5-23-23
2	FOR APPROVAL	6-14-22
1	FOR APPROVAL	5-17-22
0	FOR REVIEW	2-22-22

REVISIONS

KOZBRO LLC

STATE OF NEW HAMPSHIRE
KRYSTIAN E. KOZLOWSKI No. 14195 LICENSED PROFESSIONAL ENGINEER

FOR PERMITTING ONLY

UTILITY DETAILS

LAND OF
KRZYSZTOF & RENATA KOZLOWSKI
9 ACADEMY STREET
ROCHESTER, NH
TAX MAP 125, LOT 198

DRAWING NO.	REV.
C-6	3

CAD SCALE	AS NOTED	SHEET 6 OF 9
ORIGINAL SIZE	ANSI D	

TEMPORARY EROSION CONTROL MEASURES

1. SMALLEST PRACTICAL AREA OF LAND SHALL BE DISTURBED AT ANY ONE TIME.
2. EROSION AND SEDIMENT CONTROL MEASURES SHALL BE INSTALLED AS SHOWN ON THE PLANS, AT LOCATIONS AS REQUIRED, AND AS DIRECTED BY THE ENGINEER.
3. EROSION AND SEDIMENT MEASURES SHALL INCLUDE STRAW WATTLES, SEEDING, AND EROSION CONTROL BLANKETS (AS-NEEDED).
4. ALL DISTURBED AREAS SHALL BE RETURNED TO ORIGINAL GRADES AND ELEVATIONS. DISTURBED AREAS SHALL BE LOAMED WITH A MINIMUM OF 4" OF LOAM AND SEEDED ACCORDING TO THE SEEDING SPECIFICATIONS.
5. ALL DISTURBED AREAS WILL BE RESTABILIZED WITHIN 45 DAYS.
6. AFTER ALL DISTURBED AREAS HAVE BEEN STABILIZED, THE TEMPORARY EROSION AND SEDIMENT CONTROL MEASURES ARE TO BE REMOVED AND THE AREA DISTURBED BY THE REMOVAL SMOOTHED AND RE-VEGETATED.
7. STABILIZATION MEANS:
   - 7.1. A MINIMUM OF 85% OF VEGETATIVE COVER HAS BEEN ESTABLISHED.
   - 7.2. A MINIMUM OF 3 INCHES OF NON-EROSIVE MATERIAL SUCH AS STONE OR RIP RAP HAS BEEN INSTALLED, OR
   - 7.3. EROSION CONTROL BLANKETS HAVE BEEN INSTALLED.

CONSTRUCTION SEQUENCE

1. BUILDING 1 CONVERSION TO MULTI-FAMILY.
2. UTILITY CONNECTIONS IN STREET AND EXTENSION OF LATERALS BEYOND PROPERTY LINE. EACH CAPPED AND MARKED WITH 2X4.
3. TREE AND SHRUB REMOVAL IN CONSTRUCTION AREA ONLY AS REQUIRED.
4. TEMPORARY FENCE INSTALLATION.
5. TEMPORARY SEDIMENT EROSION CONTROL MEASURES AS SPECIFIED.
6. BUILDING 2 AND 3 CONSTRUCTION.
7. BUILDING 2 AND 3 PIPE AND CONSTRUCTION ASSOCIATED APPURTENANCES AS REQUIRED.
8. PERMANENT SEEDING AND LANDSCAPING.
9. WALKWAY CONSTRUCTION.
10. SMOOTHING AND RE-VEGETATION OF ALL DISTURBED AREAS.

SEEDING SPECIFICATION

1. TEMPORARY SEED MIX FOR STABILIZATION OF TURF SHALL BE WINTER RYE OR OATS AT A RATE OF 2.5 LB/ PER 1000 S.F. AND SHALL BE PLACED PRIOR TO OCT 15, IF PERMANENT SEEDING NOT YET COMPLETE.
2. PERMANENT SEEDING 120 LBS / ACRE

TYPE	MINIMUM PURITY (%)	MINIMUM GERMINATION (%)	POUNDS/ACRE
CREEPING FESCUE	96	85	40
PERENNIAL RYEGRASS	98	90	50
KENTUCKY BLUEGRASS	97	85	25
REDTOP	95	80	5

GRADING

1. FOUNDATION REVEAL TO BE 6" AND FINISH GRADE TO SLOPE AWAY FROM BUILDING AT 2% FOR A DISTANCE OF 10 FEET ON ALL SIDES.
2. NEW CONCRETE WALKWAY FINISHED SURFACE TO SLOPE 2% AWAY FROM BUILDING.

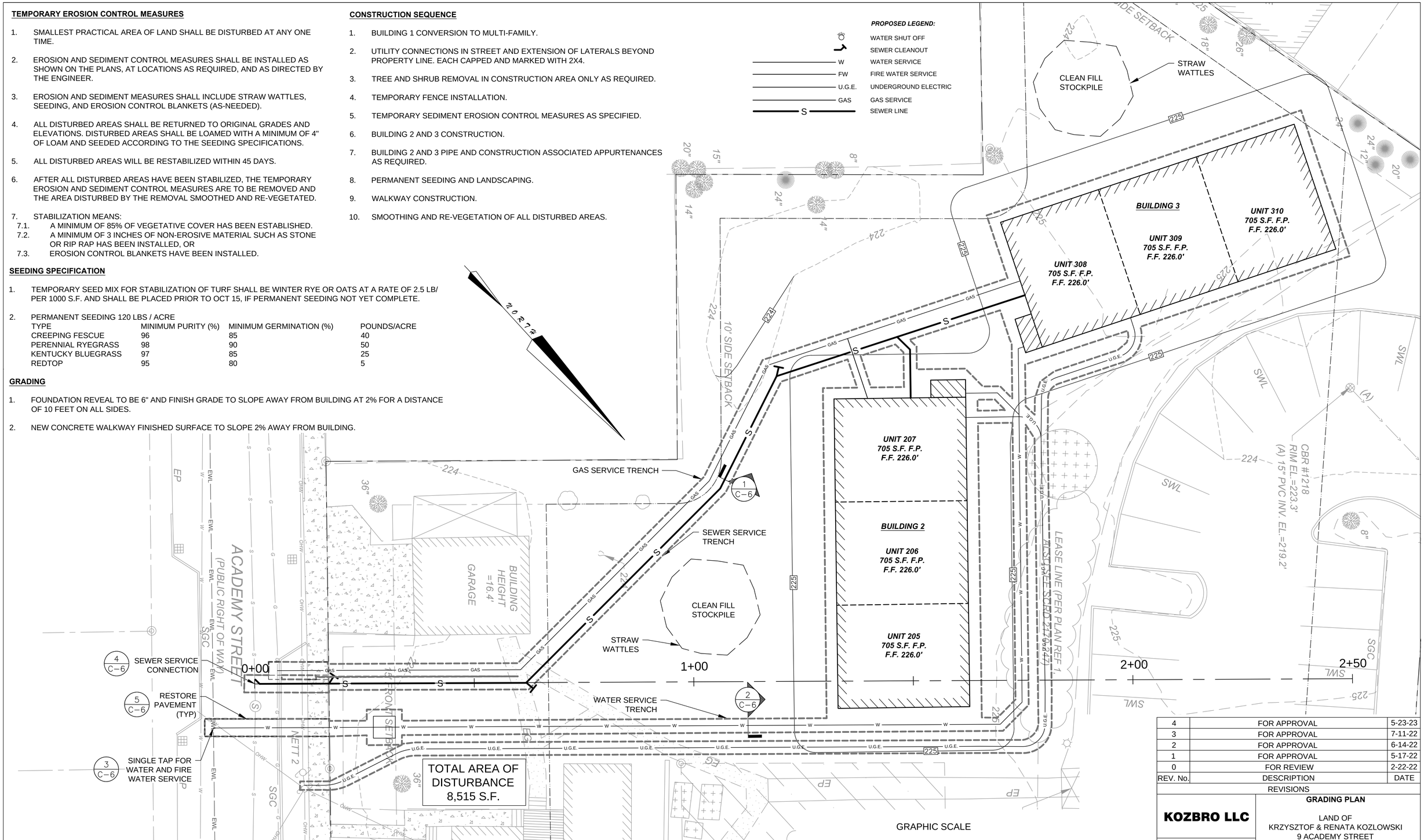

PLAN VIEW

REV. No.	DESCRIPTION	DATE
4	FOR APPROVAL	5-23-23
3	FOR APPROVAL	7-11-22
2	FOR APPROVAL	6-14-22
1	FOR APPROVAL	5-17-22
0	FOR REVIEW	2-22-22

REVISIONS

KOZBRO LLC

STATE OF NEW HAMPSHIRE — KRYSTIAN E. KOZLOWSKI No. 14195 — LICENSED PROFESSIONAL ENGINEER

FOR PERMITTING ONLY

GRADING PLAN

LAND OF
KRZYSZTOF & RENATA KOZLOWSKI
9 ACADEMY STREET
ROCHESTER, NH
TAX MAP 125, LOT 198

DRAWING NO. C-7 — REV. 4

CAD SCALE: AS NOTED — ORIGINAL SIZE: ANSI D — SHEET 7 OF 9

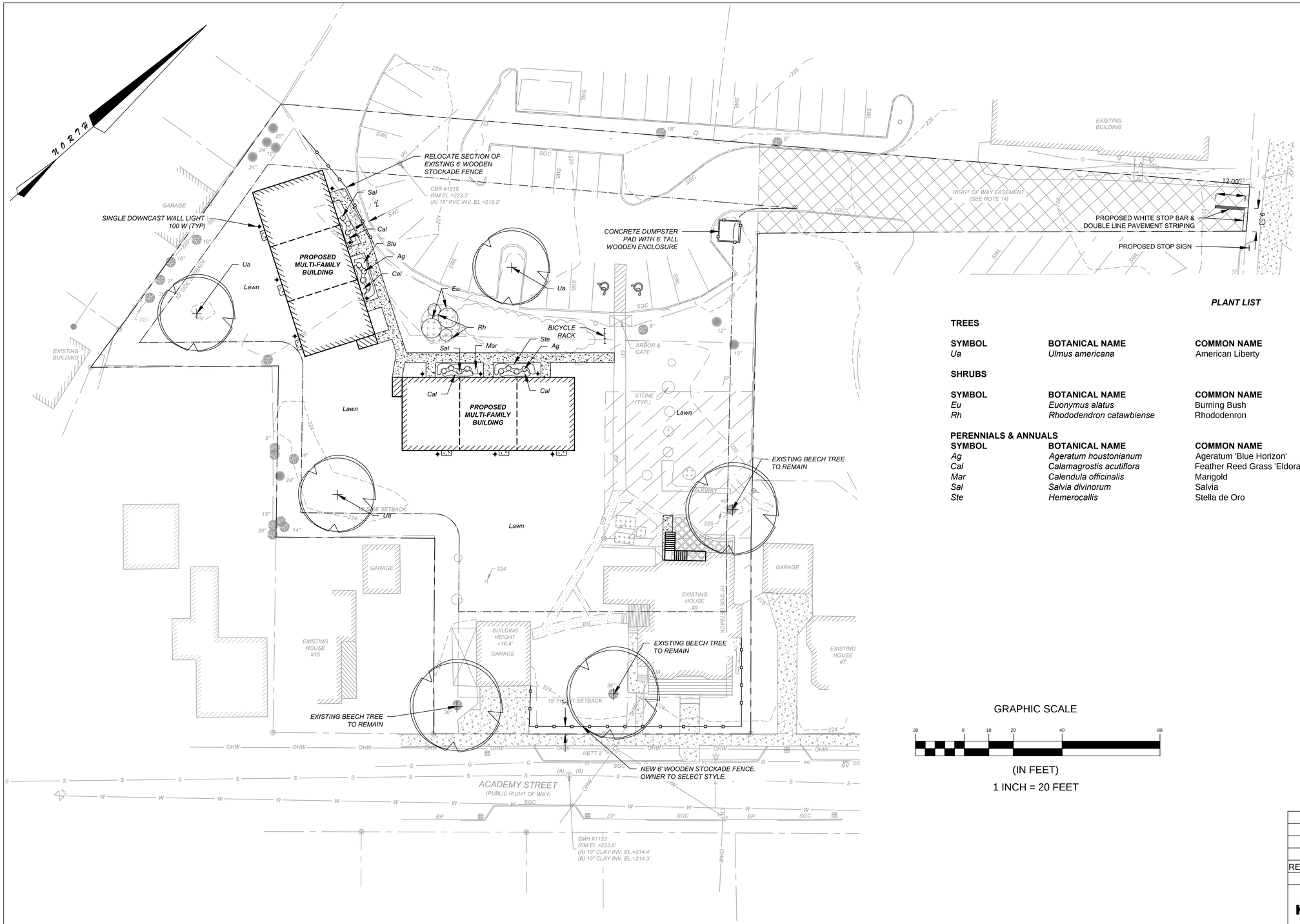

PLANT LIST

TREES

SYMBOL	BOTANICAL NAME	COMMON NAME	QUANTITY	SIZE
Ua	*Ulmus americana*	American Liberty	3	3-3.5" Caliber

SHRUBS

SYMBOL	BOTANICAL NAME	COMMON NAME	QUANTITY	SIZE
Eu	*Euonymus alatus*	Burning Bush	2	2 gal
Rh	*Rhododendron catawbiense*	Rhododenron	2	1 gal

PERENNIALS & ANNUALS

SYMBOL	BOTANICAL NAME	COMMON NAME	QUANTITY	SIZE
Ag	*Ageratum houstonianum*	Ageratum 'Blue Horizon'	8	1 gal
Cal	*Calamagrostis acutiflora*	Feather Reed Grass 'Eldorado'	75	1 gal
Mar	*Calendula officinalis*	Marigold	36	1 gal
Sal	*Salvia divinorum*	Salvia	8	1 gal
Ste	*Hemerocallis*	Stella de Oro	70	1 gal

GRAPHIC SCALE

20 0 10 20 40 80

(IN FEET)

1 INCH = 20 FEET

REV. No.	DESCRIPTION	DATE
3	FOR APPROVAL	5-23-23
2	FOR APPROVAL	7-11-22
1	FOR APPROVAL	6-14-22
0	FOR APPROVAL	5-17-22

REVISIONS

KOZBRO LLC

STATE OF NEW HAMPSHIRE
KRYSTIAN E. KOZLOWSKI No. 14195
LICENSED PROFESSIONAL ENGINEER

FOR PERMITTING ONLY

LANDSCAPING & LIGHTING PLAN

LAND OF
KRZYSZTOF & RENATA KOZLOWSKI
9 ACADEMY STREET
ROCHESTER, NH
TAX MAP 125, LOT 198

DRAWING NO. C-8

REV. 3

CAD SCALE	1" = 20'
ORIGINAL SIZE	ANSI D

SHEET 8 OF 9

NOTES:

V.I.F. ALL DIMENSIONS.

CONTRACTOR IS RESPONSIBLE FOR ALL FINISHED DIMENSIONS.

CONTRACTOR IS RESPONSIBLE FOR MEETING ALL FEDERAL, STATE, COUNTY, OR LOCAL BUILDING CODES.

FRONT ELEVATION BUILDING 3 (BUILDING 2 SIMILAR)
3/16" = 1'-0"

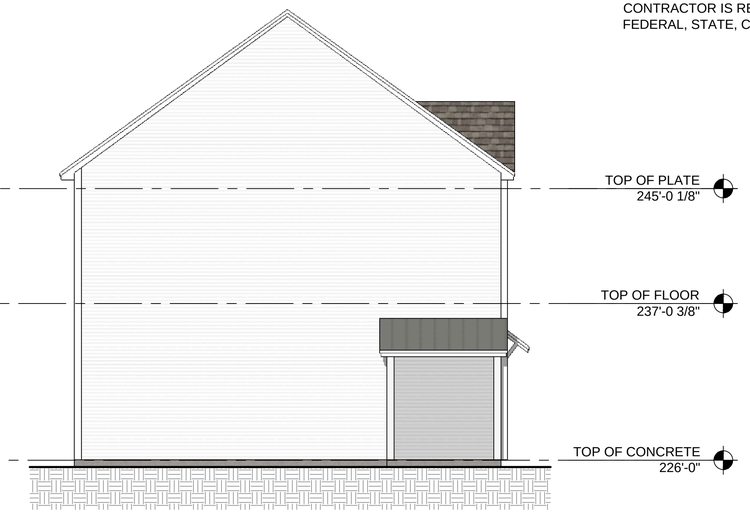

SIDE ELEVATION
3/16" = 1'-0"

REAR ELEVATION
3/16" = 1'-0"

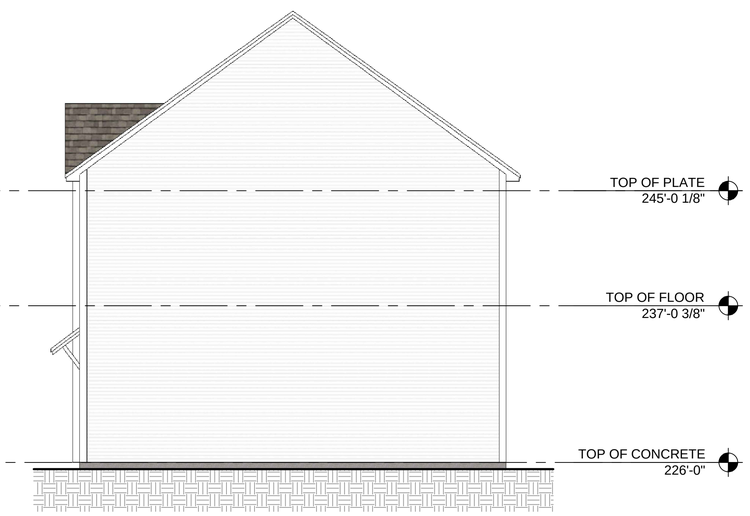

SIDE ELEVATION
3/16" = 1'-0"

EXTERIOR FINISH SCHEDULE - BUILDING 3 (BUILDING 2 SIMILAR)			
ITEM	STYLE	MATERIAL	COLOR
SIDING - BODY	4" SMOOTH CLAPBOARD	VINYL	WHITE
SIDING - FRONT ACCENT	12" BOARD AND BATTEN	VINYL	WHITE
TRIM	6" BOARD	ALUMINUM	WHITE
ROOFING - GABLE	ARCHITECTURAL SHINGLE	ASPHALT	CHARCOAL
SOFFIT - GABLE	12" SMOOTH VENTED	VINYL	WHITE
ROOFING - SHED	STANDING SEAM	METAL	DARK GRAY
WINDOW - FRAME	VARIOUS	VINYL	WHITE
DOOR	MODERN FARMHOUSE	COMPOSITE	LIGHT WOOD
FOUNDATION	FASCIA BOARD	CEMENT	DARK GRAY

NOTE: FIRE RESISTANT SIDING MATERIALS SHALL BE APPROVED BY THE FIRE DEPARTMENT WHERE REQUIRED. SEE FIRE DEPARTMENT COMPLIANCE PLAN.

REV. No.	DESCRIPTION	DATE
3	FOR APPROVAL	5/23/23
2	FOR BUDGET	10/1/22
1	FOR APPROVAL	5/17/22
0	FOR REVIEW	2/22/22

REVISIONS

KOZBRO LLC

STATE OF NEW HAMPSHIRE
KRYSTIAN E. KOZLOWSKI
No. 14195
LICENSED
PROFESSIONAL ENGINEER

FOR PERMITTING ONLY

ELEVATIONS
BUILDINGS 2 & 3

MILLSTONE PLACE
MULTIFAMILY RESIDENCES
9 ACADEMY STREET
ROCHESTER, NH 03867

DRAWING NO. A-0
REV. 3

CAD SCALE 3/16" = 1'-0"
ORIGINAL SIZE ANSI D

SHEET 9 OF 9