100 International Drive, Suite 152
Portsmouth, NH 03801
tel: 603-431-3937 fax: 603-433-4358
www.westonandsampson.com

planning, permitting, design, construction, operation, maintenance Weston&Sampson®

May 14, 2015

Mr. Michael Bezanson, P.E., Interim Director
Department of Public Works
City of Rochester
45 Old Dover Road
Rochester, NH 03867

Re: Rochester Department of Public Works Facility Study

Dear Mr. Bezanson,

We are pleased to submit this summary report which documents work completed under the above referenced contract by Weston and Sampson relative to programming, planning and site selection for a new facility to house the Rochester Department Public Works.

We have been very appreciative of the opportunity to work with you and your staff during the development of this study, and we look forward to the prospect of providing further assistance as you proceed with development of your new facility. If you have any questions regarding the investigation or recommendations included in this document, please do not hesitate to contact me by at 603-431-3937 or by email at perkinsc@wseinc.com.

Very truly yours,

WESTON & SAMPSON

Christopher M. Perkins, PE
Vice President

Weston&Sampson®
environmental/infrastructure consultants

100 International Drive, Suite 152, Portsmouth, NH 03801
tel: 603-431-3937 fax: 603-433-4358

Draft Final Report

Rochester Department of Public Works Facility Study

City of Rochester, NH

45 Old Dover Road
Rochester, NH 03867

May 14, 2015

TABLE OF CONTENTS

Page

EXECUTIVE SUMMARY

The City of Rochester, acting through its Department of Public Works, commissioned Weston and Sampson to undertake a Feasibility Study for new DPW site and facility. The scope of investigation included an assessment of existing properties and facilities, investigation of possible sites as identified by the City, a facility space needs assessment, conceptual building and site planning and development of cost estimates for a new facility.

The City's existing Department of Public Works building is 14,500 square feet and, being roughly 62 years old, has lost its functionality and its ability to expand and keep up with the growing population and infrastructure needs of the city. Current staff consists of 57 full-time and 5 part-time personnel. Seasonally, part-time personnel increase due to plowing operations. The departments that maintain and operate the public infrastructure and work out of the current facility include: Engineering, Fleet and Highway, Utilities, and Vehicle Maintenance. The majority of the administrative functions for the DPW are also currently located here. Buildings & Grounds is currently working out of the Rochester Community Center building. It is anticipated that superintendents for Water & Sewer and Storm Water Engineering will need to be added in the future. The Department of Public Works, serving a population of approximately 31,000 residents, is responsible for maintaining over 175 miles of roads, 265 miles of underground infrastructure, 33 pump stations, Water and Wastewater Treatment Facilities, 11 public buildings, and grounds maintenance at over 50 locations. The department's annual Capital Improvements Plan budget is roughly $10M and its annual operations and maintenance budget is roughly $25M.

After an iterative space needs assessment process, Weston & Sampson recommends that a new Public Works Facility to support the current and future needs of the City should include approximately 11,700 square feet of administration and staff support space, 18,000 square feet of maintenance and shop space, and 24,000 square feet of heated vehicle storage space, including a truck washing facility, and an 8,000 square foot small-vehicle storage canopy. Recommended site amenities include a 3,000 ton-capacity Salt Shed, a 7,000 square foot open canopy for Salt Spreader storage, a fuel facility designed for all-city use, bulk materials storage areas (e.g. salt, sand, loam, gravel, road grindings, etc.), and a public salt pick-up area.

Weston & Sampson created a matrix of the 6 potential city-owned sites and a scoring system to rank the sites for suitability based on 10 criteria points. From this ranking, it was determined that 58 Pickering Road was the most suitable site, scoring 86 out of a possible 120 (72%). Despite potential contamination, the Pickering Road site, at 17 acres, scored high in size and geography, proximity to city center, availability of utilities and zoning requirements. The site design for the proposed new DPW includes a city-wide fueling facility accessible outside of the DPW operations areas and an adjacent public salt pickup. The DPW site is designed to allow public access to the administration area without disruption of the operations. This means maintaining security for the DPW equipment and salt storage, and efficient circulation of DPW vehicles during normal and storm event operations.

Weston & Sampson has prepared a Conceptual Construction and Project cost estimate based on the above described proposed new site and facility and using historical typical unit costs for similar construction types. The current total project cost estimate, in 2014 dollars, is approximately $19.1 million dollars. This includes $12.5M for building construction, $3.0M for site development and $3.6M for soft costs and contingencies. An approximate 4% per year should be added to this cost for a projection of escalation due to annual inflation of construction and materials costs.

EXISTING FACILITY DESCRIPTION

Weston & Sampson's project team toured all of the current sites and buildings being utilized by the Rochester DPW personnel to operate, maintain, and store equipment and materials.

The current Rochester DPW facilities consist of the following:

45 Old Dover Road Facility:

- The 14,500 sf structure was built in 1952 and currently houses the DPW director, office manager and associated administrative staff, and the city's engineering department. The building serves the public for infrastructure issues, disputes, permitting questions, etc.
- The facility is a low, flat-roofed, concrete block structure with individual bay doors which accommodate Fleet Maintenance, Utilities/Water & Sewer, and Highway departments. There is currently no indoor storage for vehicles, although one of the maintenance bays is used to store a vacuum truck during the winter months.
- Maintenance area consists of six bays, one of which is used for parts storage and another for seasonal storage.
- Majority of large vehicles, equipment, plows, trailers, etc are stored outside on the DPW site. Salt spreaders are stored in side bays of salt shed. Some smaller vehicles (sidewalk plows, bobcats, etc) are stored in two bays of building and share space with tire and other material storage.
- Current salt shed is wood structure with side bays for storage of salt spreaders. Salt shed is adequate size for purpose, but shape does not allow for separation of sand piles adjacent to salt.
- Break-out materials, stock piled sand, gravel, etc is stored in various location around the site.
- Existing fueling facility serves all city vehicles and consists of one dispenser each for diesel and gasoline and two above-ground storage tanks. Fuel management data is compiled by hand.
- Small garage serves as sign storage and shop space.

150 Wakefield Street, Community Center Facility:

- Office, equipment and carpentry shop located at Rochester Community Center.
- Responsible for all public buildings maintenance and care for parks, pools, fields, etc.
- Equipment includes small trucks, small earth mover, mowers, sidewalk sweepers, lifts, snow blowers, field landscaping equipment, carpentry shop equipment, etc.

Washington Street, Offsite Quonset Hut Storage Facility:

- Quonset hut storage approximate 4,000 square feet of unheated storage.
- Includes water and sewer equipment storage.
- Emergency water pumps, generators, piping, large water meters, gate valves, hydrants, etc.

31 Wakefield Street, Rochester City Hall:

- Water & Sewer Billing located at City Hall. Managed by DPW Office Manager from Old Dover Road site.
- 3 Administrative staff for utility billing, public billing counter, etc.

EXISTING FACILITY ASSESSMENT

The existing DPW facility at 45 Old Dover Road was examined by the project team and included a walk-through and interviews with staff. The building is 60 years old and has significant inadequacies for continued use by the DPW. Generally, the existing DPW building lacks basic building code requirements including proper ventilation, thermal insulation, and separation between incompatible occupancies.

Administration:

- There is no separate public counter or area to separate public from staff, and there a need for a separate conference room for staff to meet with public privately.

- The Office Manager must manage staff in two locations due to staff at City Hall.
- Physical separation between Administration and Maintenance area is inadequate to stop noise and fumes.
- Administration does not have a separate break room or toilet facilities
- Currently Administration printer/copier space, Engineer layout and plan storage space and meeting/conference space all conflict and are interfere with main circulation space.

Maintenance:

- The maintenance bay doors are too narrow for large wing plows and the bays are too short for the larger vehicles forcing maintenance staff to work outdoors at times, particularly dangerous during winter. The building is too low to allow lifting of large vehicles and the overhead lift is difficult to use because of low head room and interference by lighting, etc.
- Maintenance does not have adequate separate space for welding and no dedicated space for body work.
- Currently there is no dedicated heated storage space for vehicles – space is shared with Maintenance.
- Shop does not have spray booth.

Shop Spaces:

- Department head office spaces have inadequate space and are exposed. Staff and department heads cannot make phone calls without disturbing other staff.
- Small sign shop garage is unheated and inadequate for sign storage and shop space.

Yard Space:

- Facility lacks interior vehicle storage space causing premature deterioration of equipment and vehicles.
- Site lacks adequate space for material storage.
- Currently relying on significant offsite storage for materials. This makes for inefficient use of time to travel between storage sites.
- Fuel system: while a fill assessment of the fuel system was not undertaken, it appears that there is significant corrosion on the exterior of the above-ground fuel storage tanks. If the fuel system is not replaced in the near future, it is recommended that a full assessment be performed of the existing fuel system to ensure its safety and code compliance. This could include testing the integrity of the fuel storage tanks and the concrete containment walls, inspection and evaluation of the dispensers and pumps to ensure no leakage, inspection and pressure testing of underground piping, and overall inspection and assessment for compliance with state and national code requirements. A fuel management system and associated tank monitoring system should be in place to keep track of inventory to ensure there is no leakage occurring. Finally, the Spill Prevention plan (SPCC) should be reviewed and updated to comply with current codes and requirements.

See Exhibit A for detailed existing facility assessment documentation.

SPACE NEEDS ASSESSMENT

Weston & Sampson held a series of meetings with senior management and supervisory staff to discuss in detail the operations and administrative management of each department; the equipment and fleet utilized by each team; the space requirements for storing vehicles, equipment, bulk materials and consumables; and their normal daily activities as well as procedures for dealing with emergencies and storm events.

Data gathered at these meetings was compiled and organized by department and occupancy type to develop a comprehensive program and space needs analysis. The individual typical spaces were developed based on similar facilities programmed and designed by Weston & Sampson. The result of this

analysis was a Space Needs Assessment spreadsheet that presented recommended sizes for spaces required to support the operations of the working groups. Spaces were organized by type (e.g. Common Areas, Office / Office support areas, Employees Facilities, Work Shops, etc.). Each category of space type (e.g. Office) was summarized, and "grossing factors" applied to account for non-usable space (corridors, stairs, building structure, exterior walls, mechanical duct space, etc.). This document reflects Weston & Sampson's recommendation for an "ideal" facility to house the Department of Public Works. The summary of this assessment was a facility totaling slightly more than 60,000 square feet.

As part of the space needs assessment process, diagrammatic sketches were created for all spaces identified during staff interviews for the purpose of demonstrating the functional requirements as understood by Weston & Sampson, and the logic behind the square footage identified for each space. Planning block diagrams, which consist of the cumulative areas for all spaces with each category of space for each Division were then created to illustrate the relative building volumes required, and for use a planning blocks for initial site concept development. See Exhibit B for detailed space needs assessment documentation.

SITE INVESTIGATION

City-Owned Sites

The following City-owned sites were identified by the DPW and the City for inclusion for site analysis.

- 45 Old Dover Road (Existing DPW Site) (5.3 acres)
- 22 Phillips Lane (17.0 acres)
- 58 Pickering Road (17.6 acres)
- 442 Pickering Road (30.16 acres)
- 83 Haven Hill Road (15.0 acres)
- 162 Chestnut Hill Road (46 acres)

A matrix was developed to evaluate and compare all the sites based on ten (10) criteria. Each site was then scored on these criteria and a ranking was determined for suitability as the site for a new DPW facility. See Exhibit C for detailed site analysis. The following is a summary of the site evaluations:

45 Old Dover Road is the current DPW facility site south of the city center. The site is the smallest of the six parcels (5.3 acres) considered and below the minimum 7 acres that would be recommend for the new facility. Utility service is readily available at this site and traffic impact would be minimal as the existing DPW operates here currently. Using this site would present additional complications and costs due to the necessity of either phasing the project and/or obtaining temporary facilities while the new DPW is being built.

22 Philips Lane is an agricultural zoned vacant parcel north of the city center. Due to the shape of the parcel, access to the site is limited and high groundwater and wetland presence also make this location unfavorable.

58 Pickering Road is the location of the old brickyard in the Gonic area south of the city center. The parcel is large and access to utilities is favorable. The zoning of the parcel is industrial. Known contamination of the site may present difficulties in permitting and additional site preparation costs, further investigation of the site such as a sub-surface investigation is recommended. The site also has a sewer main running through that would have be avoided by any building construction.

442 Pickering Road is an agricultural zoned vacant parcel located in the Gonic area south of the city center. The parcel is large however; it is the furthest from city center and lacks access to utilities. The site is also bisected by heavily wooded wetlands and a pond and therefore the usable portion of the site may much smaller.

83 Haven Hill Road is an agricultural zoned vacant parcel located to east of the city center. Like the 442 Pickering road site the size is favorable but the distance from city center and access to utilities is unfavorable. The site is adjacent to a Somerset well site, whose impact has yet to be determined but will likely make permitting more difficult.

162 Chestnut Hill Road is located north of the city center. The site currently houses a drinking water well, abuts the Cocheco River and has restricted land use which would make the parcel unfavorable for use a DPW facility. The parcel also has unfavorable access to utilities.

After review of the site evaluation matrix and discussion with the DPW and the City, it was determined that 58 Pickering Road was the most favorable site. According to the ranking, the site scored an 87 out of a possible 120 points, a 72% score. This was the highest score of all available sites. The site if fairly level and has moderately favorable street access for DPW truck traffic and therefore traffic impacts are manageable. Although somewhat restricted by the sewer main and some limited wetlands areas, the site is large enough to accommodate the new DPW building and all associated yard functions to meet the programmatic requirements as defined in the program matrix and in meetings with the DPW management.

SITE AND BUILDING PLANNING - CONCEPTUAL

Using 58 Pickering Road as the site, schematic level concept site and building layouts were developed and refined through an iterative design and meeting process. The following are brief narratives describing the intent of the Site and Building layout as currently designed:

Site:
The most important criteria that the site design needed to meet were site circulation, security, and storage space. The development of the site vehicle circulation hinged on allowing DPW truck and staff traffic to travel in and around the site while allowing significant public access to the administration portion of the building. The program required that the administration include public functions now located at City Hall. This meant that public access could not disrupt the DPW operations. A new Fuel Facility was also required for city-wide use. This has been placed near the front of the site to allow access by city employees without going through the DPW yard, but also convenient for DPW truck traffic to access. Security was particularly important for the Salt Shed area. This meant the Salt Shed needed to be closer the DPW building to allow monitoring and also to more easily manage salt deliveries, while still allowing a clear circulation path for salt spreader trucks during a snow emergency. A public salt distribution area was established near the front of the site, again to discourage disruption of the DPW operations. Other criteria influencing the site layout were ease of snow removal from site; pick-up and drop off area for uniforms; manageable vehicle circulation for shops, maintenance and the vehicle storage garage; space for disabled vehicles awaiting maintenance; and adequate space for storage and management of various stored materials.

Building:
The current design of the building culminates a number of iterations for the organization of the space needs. Some important criteria that are addressed include the following according to department or groups of departments:

- Administration: The organization of the administration space was carefully arranged to accommodate safe separation between staff and public, while keeping the entry open for public use. Separation between engineering and administrative staff allows independent collaborative work areas. The DPW Director especially emphasized the importance of collaborative space in the engineering area and for the department head offices.
- Department head and staff support areas: All the department head offices are grouped together for both collaborative purposes and for shared management responsibilities. The offices are arranged such they all have view to the Muster/Break room, which can also double as a storm event room. Locker rooms and Muster Room are accessed from a staff-only building entry and have direct access to the shops, maintenance and vehicle storage areas. The Muster Room also has access to a corridor which can be locked off from the rest of the building to allow for the public use of the room for training, voting, etc. A mud room is placed at the entry to the building from the Vehicle Storage garage.
- Vehicle Storage: The Vehicle Storage garage is arranged with a center isle and angled parking, to allow for single direction vehicle traffic. The space is sized such that vehicles are stored in the center isle so as to utilize all the space in the building. A wash bay has been located with a knock-down pad immediately outside. The wash bay has access directly into the vehicle storage garage to allow vehicles to enter the garage after washing without dripping freezing water outside or accumulating salt.

FLEET AND FACILITY VALUATIONS

Weston & Sampson prepared an evaluation of the fleet management and fleet maintenance staffing for the City of Rochester based on the existing fleet, replacement budgets, and vehicle equivalent calculations. Vehicle Equivalent Calculations, as explained in detail in the attached report, determine the maintenance load on the staff based on the relative maintenance requirements for each of the City's vehicles and equipment. In summary, Weston & Sampson has determined that the current staffing level of one lead and two support mechanics is minimum but adequate given the current state of the vehicle fleet. This recommendation is also based on the improved efficiency and productivity from a new state-of-the-art maintenance facility.

Weston & Sampson recommends implementing a proactive vehicle replacement and maintenance management plan to ensure that vehicles are replaced in a timely manner and are not allowed to have their replacement deferred, adding to overall maintenance burden and costs. See attached Exhibit E for more details of this recommendation.

The City of Rochester's current DPW facility located at 45 Old Dover Road has an assessed present day value range of $750,000 to $830,000. The present day land value has a range of $450,000 to $530,000. Given the condition of the existing facility and its likelihood that potential buyers would see this as a "tear-down" it is best to consider the land value alone. Furthermore, the existing fuel station and possible contamination could also have an effect on the value of the existing site.

COMMUNITY COMPARISON

Weston & Sampson was asked to research and make a comparison to other NH communities with similar demographics to the City of Rochester. The goal of this research was to determine how the existing Rochester DPW facility physical size, staffing, and vehicle count compared to similar communities. Community statistics were gathered including community size, population and density, miles of maintained roads, number of DPW divisions and DPW staff count, and size and age of DPW facility for 10 comparable

NH communities. A number of ratios were then calculated to find meaningful comparisons. Some of these ratios included: Staff count to residents; Staff count to road mile; Facility size to road mile; facility size to Staff count; Vehicle count to road mile; and simple age of facility. For each statistic, a comparison was made of whether the City of Rochester was below, similar to, or above the average of all the other communities in the list. The criteria for choosing the list of similar communities were based on community size and population, the following is a summary of the city data:

The City of Rochester has slightly higher population and is somewhat larger than average, and is therefore generally close to the average in population density. The city, because of its larger geographic size, is close to average in road density but has a more miles of maintained roadway than average. Rochester's DPW facility is more than 50% older and smaller than the average of the ten communities. While the staff count for the Rochester DPW is very close to average, the ratios of staff per resident and staff per road mile are 30% to 50% below average. Similarly, and because of the small size of the existing facility, the ratio of facility square footage to staff is well below average.

Weston & Sampson was also asked to research and make a comparison to other NH communities with similar demographics to the City of Rochester in regards to sewer and water staff. The goal of this research was to determine how the existing Rochester sewer and water staff compared to similar communities based on length of infrastructure such as sewer and water mains, number of pump stations, treatment facilities, etc. While data available was limited to three other communities, in general, the City of Rochester was found to have 25% to 50% less than average in number of dedicated Water and Sewer staff.

See attached Exhibit F for more details on the community comparison data and charts.

PROPOSED AND CONSTRUCTION COSTS

Using the space needs spreadsheet to compile square footage of the proposed new facility, a conceptual construction and project budget was developed. The square foot prices, which were used to calculate estimated construction costs, were developed from Weston & Sampson's experience with these types of construction, actual construction bid costs and costs developed by professional estimators for Weston & Sampson. Because of the efficiency of the Pre-Engineered type of steel construction and the utilitarian level of finishes a 10% reduction in cost is typically used for this type of project. New Hampshire is also considered to be a less expensive construction environment than Massachusetts, in which the square foot costs were developed, and therefore an additional 10% regional adjustment is applied.
The construction cost is calculated based on the different types of spaces, which range from $50 per square foot to nearly $400 depending on the level of finish, requirements and complexity of the HAVC/MEP systems, and the efficiency of construction. Specialized equipment, such as Vehicles lifts, etc, Fuel Facilities, Site Work, and site amenities, such as Salt Shed, open vehicle storage canopies, etc are added to the building construction totals. A design contingency is added at this level to account for potential unforeseen construction costs due to discoveries during design/investigation period. Soft costs, consisting of design fees, specialty engineering fees, such as environmental remediation, or geotechnical services, and a construction contingency are included typically as a percentage of the construction cost to produce the total estimated project cost.

In the case of the proposed new DPW facility for the City of Rochester, the estimated construction cost for the approximately 63,000 sf facility is $15.5 million, with a total project cost estimated to be $19.1 million, in 2014 dollars. Note that escalation costs of approximately 4% should be added for each additional year projected beyond 2014/2015 for the construction of the new facility.

LIST OF EXHIBITS

EXHIBIT A

Existing Conditions Documentation


Old Dover Rd
Old Dover Rd


PUBLIC WORKS DEPT.
ROCHESTER, N. H.
VISITOR PARKING


PUBLIC WORKS DEPT.


GAS


CAT


48
3500 HD


A-1 FIREWOOD

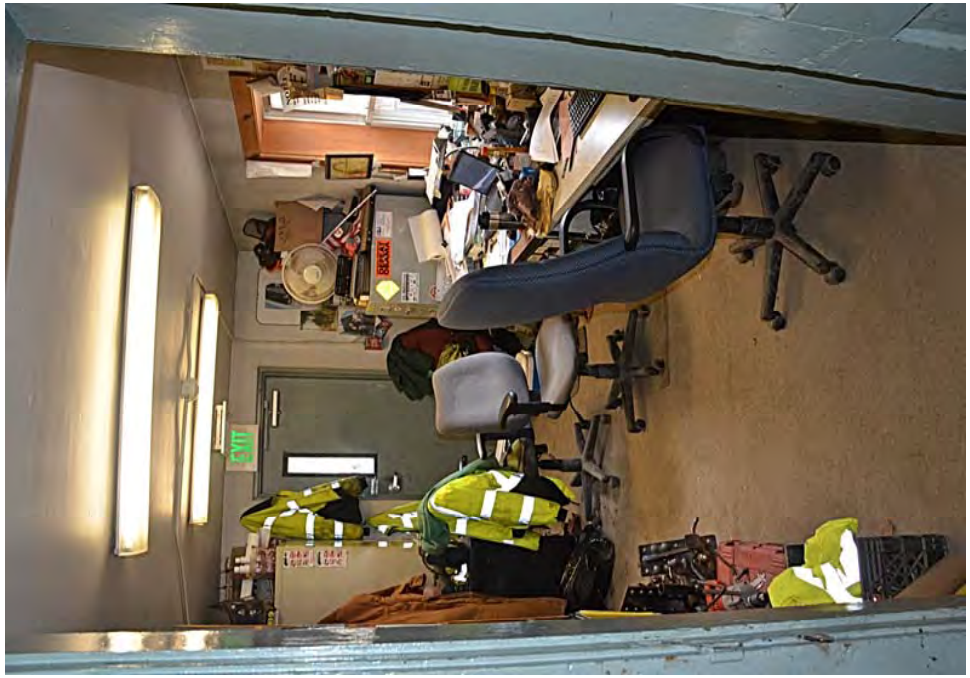


MOHAWK
DAEWOO
300 V

EXHIBIT B

Space Needs Assessment Documentation

City of Rochester, New Hampshire
Department of Public Works
Space Needs Summary
January 20, 2015

Building Requirements

Area	Description	Room Dimensions		
		Area (SF)	L	W
Administration and Support				
	Vestibule	80	8	10
	Waiting/Public Counter	252	18	14
	Public Toilet Facilities	119	7	17
	Administration (Workstations for 6 staff)	880	40	22
	DPW Director (Office)	180	12	15
	Office Manager (Office)	144	12	12
	City Engineer (Office)	144	12	12
	Construction Engineers (2 lrg Workstations)	288	12	24
	Engineering Work Area/Plan Storage	216	12	18
	Utilities Super (Office)	144	12	12
	Highway/Fleet Super (Office)	144	12	12
	B&G Super (Office)	144	12	12
	Storm water Super (Office - Future)	144	12	12
	Water Chief (Office)	144	12	12
	Sewer Chief (Office)	144	12	12
	Large Conference Room	252	14	18
	Small Conference Room	120	10	12
	Active File Storage	196	14	14
	Archive File Storage	196	14	14
	Plotter/Plan Room - Shared	450	15	30
	Administration Break Room/Kitchenette	196	14	14
	Admin Toilet Facilities	119	7	17
	Supply Closet	64	8	8
	General Closet	24	4	6
	Janitor Closet	36	6	6
	Subtotal:	4,820		
	Area Grossing Factor (15%):	723		
	Circulation (20%):	1,109		
	TOTAL:	**6,652**		
Building Support				
	Main Electric Room	200	10	20
	Secondary Electric Room	80	8	10
	Plumbing/Fire Protection Room	160	10	16
	Mechanical Room	160	10	16
	Server Room	48	6	8
	Telephone / Data Room	64	8	8
	Subtotal:	712		
	Area Grossing Factor (15%):	107		
	Circulation (20%):	164		
	TOTAL:	**983**		

City of Rochester, New Hampshire
Department of Public Works
Space Needs Summary
January 20, 2015

Building Requirements

Area	Description	Room Dimensions		
		Area (SF)	L	W
Employee Facilities				
	Workforce Muster/Training/Lunch Room	1,344	32	42
	Male Locker / Shower / Toilet (50 Lockers)	990	30	33
	Female Locker / Shower / Toilet (6 Lockers)	238	14	17
	Mudroom	150	10	15
	Supplies/Uniform Drop off/Storage	150	10	15
	Subtotal:	2,872		
	Area Grossing Factor (15%):	431		
	Circulation (20%):	661		
	TOTAL:	**3,963**		
Work Shops				
	Highway Carpentry Shop/Sign Shop	600	20	30
	Highway Secured Storage	400	20	20
	Utilities Shop	600	20	30
	Utilities Storage	400	20	20
	Water Lead Office	144	12	12
	Water Meter Shop	600	20	30
	Water Meter Storage	400	20	20
	Sewer Shop	560	16	35
	Sewer Storage	400	20	20
	Buildings and Grounds Shop	900	30	30
	Buildings and Grounds Equipment Storage	600	20	30
	Buildings and Grounds Stock Room	400	20	20
	Buildings and Grounds Tool Storage	400	20	20
	Subtotal:	6,404		
	Area Grossing Factor (5%):	320		
	Circulation (20%):	1,345		
	TOTAL:	**8,069**		

City of Rochester, New Hampshire
Department of Public Works
Space Needs Summary
January 20, 2015

Building Requirements

Area	Description	Room Dimensions		
		Area (SF)	**L**	**W**
Vehicle Maintenance				
	Heavy Equipment Bay	2,160	24	90
	Heavy Equipment Bay	2,160	24	90
	Vehicle Bay	800	20	40
	Vehicle Bay	800	20	40
	Welding Area/Metal Storage	800	20	40
	Spray Booth	800	20	40
	Hydraulic Hose Workshop	120	10	12
	Maintenance Workshop/Small Eng Repair	800	20	40
	Maintenance Tool Storage	400	20	20
	Maintenance Tire Storage	600	20	30
	Parts Storage Room	1,024	32	32
	Fluids Room	216	12	18
	Maintenance Lead Mechanics Office	180	12	15
	Maintenance Reference Room	144	12	12
	Maintenance Break Room	144	12	12
	Maintenance Male/Female Toilets	119	17	7
	HVAC/Compressor Room	600	20	30
	Electic Room	36	6	6
	Subtotal:	11,903		
	Area Grossing Factor (5%):	595		
	Circulation (10%):	1,250		
	TOTAL:	**13,748**		
Wash Bay				
	Wash Bay	1,375	25	55
	Wash Equipment Room	216	12	18
	Subtotal:	1,591		
	Area Grossing Factor (5%):	80		
	Circulation:	n/a		
	TOTAL:	**1,671**		
Vehicle and Equipment Storage (DPW only)			*Area/Space*	*# Spaces*
	Large Vehicle Storage	12,880	460	28
	Standard Vehicle Storage	5,500	250	22
	Dedicated Small Equipment Storage	1,440	144	10
	Misc Storage	1,200	120	10
	Subtotal:	21,020		
	Area Grossing Factor (5%):	1,051		
	Circulation (35%):	7,357		
	TOTAL:	**29,428**		

TOTAL FACILITY FOOTPRINT AREA:	**64,513**

City of Rochester, New Hampshire
Department of Public Works
Space Needs Summary
January 20, 2015

Building Requirements

Area	Description	Room Dimensions		
		Area (SF)	**L**	**W**
Vehicle Canopy Storage (DPW only)			*Area/Space*	*# Spaces*
	Large Vehicle Storage	1,900	475	4
	Standard Vehicle Storage	660	220	3
	Dedicated Small Equipment Storage	600	100	6
	Misc Storage	500	100	5
	Subtotal:	3,660		
	Area Grossing Factor (5%):	183		
	Circulation (0%):	n/a		
	TOTAL:	**3,843**		

DPW Staffing

Highway Maintenance (Lead +2 Mech)	3
Highway Fleet (10 Staff)	10
Utilities (Lead + 5 Staff + 2 Meter Reader/Tech)	8
Buildings and Grounds (Lead + 9 Staff)	10
Part-Time Staff (5 Staff - Shared lockers?)	3
Water (Lead + 4 Staff)	5
Waste Water Operations (Lead + 2 Staff)	3
Waste Water Maintenance (Lead + 4 Staff)	5
Total:	**47**

Vehicle Garage (DPW only*)

	Large Equipment	**Standard Vehicle**	**Small Equip**
Highway	24	6	4
Water & Sewer	5	6	1
Buildings and Grounds	2	9	2
Shared	-	7	-
TOTAL:	**31**	**28**	**7**

City of Rochester, New Hampshire
Department of Public Works
Space Needs Summary
January 20, 2015

Building Requirements

Area	Description	Room Dimensions		
		Area (SF)	L	W
	Vehicle Canopy (DPW only*)			
		Large Equipment	**Standard Vehicle**	**Small Equip**
	Highway	4	3	1
	Water & Sewer	-	-	5
	Buildings and Grounds	-	-	-
	Shared	-	-	-
	TOTAL:	**4**	**3**	**6**

* Does not inlcude vehicles stored at Waste Water Facility or non-DPW vehicles/equip

Site Requirements

Name	Description	SF Area
Building	Building Footprint	64,513
Vehicle access and circulation	Paved access around building and to overhead doors (50%)	32,257
Parking	Paved parking for up to 60 passenger vehicles (270 SF per vehicle plus circulation)	30,000
Vehicle Repair Storage	Exterior storage for diabled vehicles	8,000
Salt Shed and loading area	3000 Ton Capacity Salt Shed and loading area	8,000
Canopy	Covered storage for various equipment, materials	5,188
Dumpster		2,000
Materials Storage (including loading and circulation)	3/4" stone, 1.5" stone, riprap, masonry sand, pavement waste cuts, general waste cuts, screened materials, screened materials, etc.	5,750
Screening operations	Space for screening and processing bulk materials	3,000
Fueling Operations (including loading and circluation)	Fuel Island and associated circulation	3,500

Total Required Site Size (SF):	**162,208**
Site Vehicle Circulation (50%)	81,104
Setback Adjustment Factor (20%):	48,662
Total Minimum Site Size (SF):	**291,974**
Total Minimum Site Size (Acres):	**6.70**

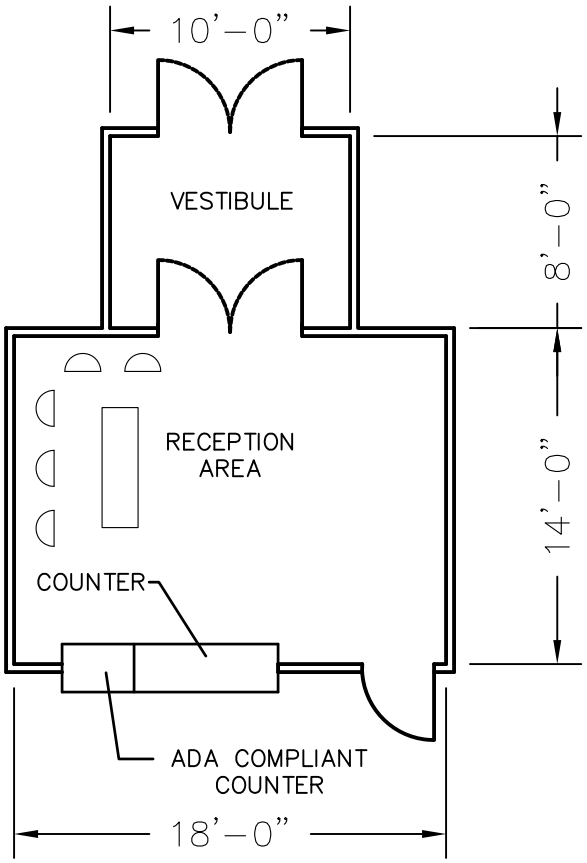

VESTIBULE/WAITING/PUBLIC COUNTER

14' x 18' = 252 SF
8' x 10' = 80 SF

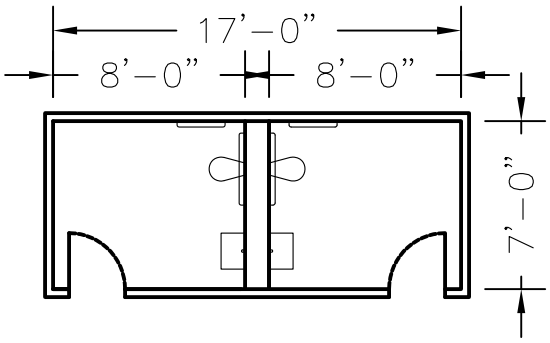

PUBLIC TOILET FACILITIES

7' x 17' = 119 SF

ADMINISTRATION

Public Services Areas

City of Rochester
Department of Public Works

Scale: 1/8" = 1'-0" Sheet 1

WESTON & SAMPSON ENGINEERS, INC.

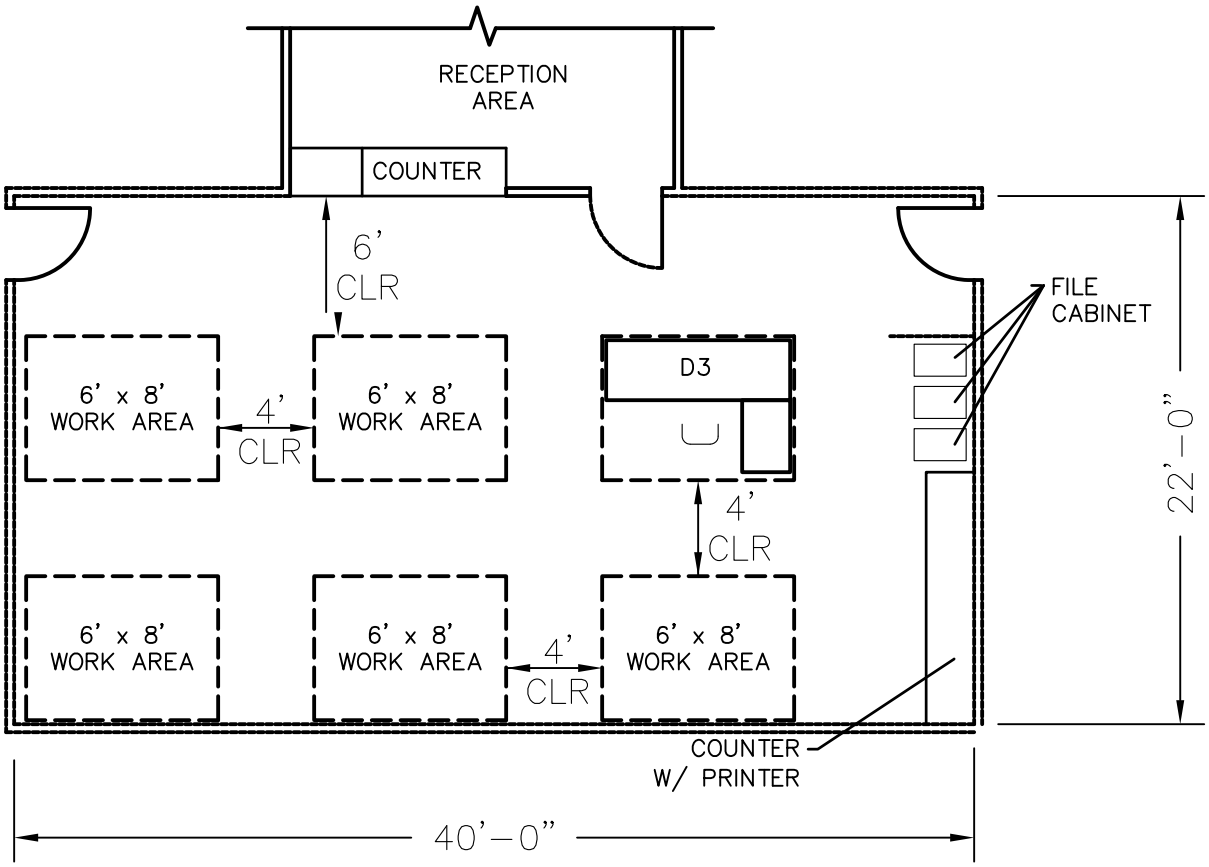

ADMINISTRATION AREA

22' x 40' = 880 SF

ADMINISTRATION

Administration Work Area

City of Rochester
Department of Public Works

Scale: 1/8" = 1'-0" Sheet 2

WESTON & SAMPSON ENGINEERS, INC.

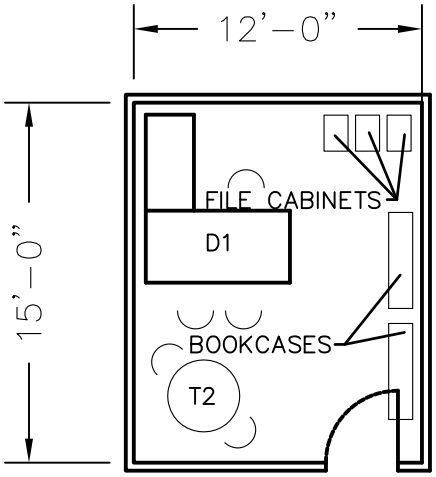

DPW DIRECTOR
15' x 18' = 270 SF

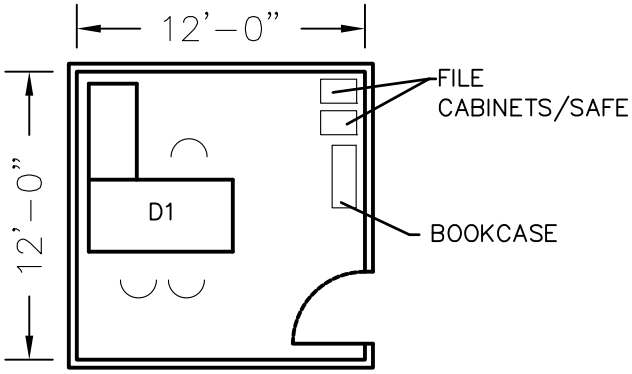

OFFICE MANAGER
12' x 12' = 144 SF

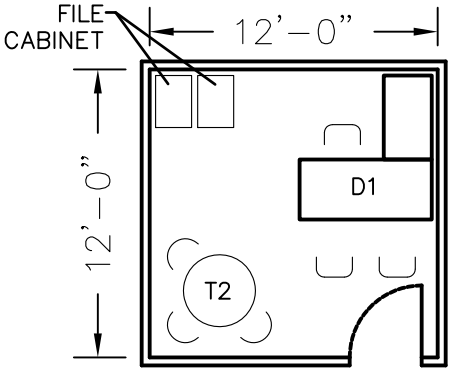

CITY ENGINEER
12' x 12' = 144 SF

ADMINISTRATION

Administration Work Area

City of Rochester
Department of Public Works
Scale: 1/8" = 1'-0" Sheet 3

WESTON & SAMPSON ENGINEERS, INC.

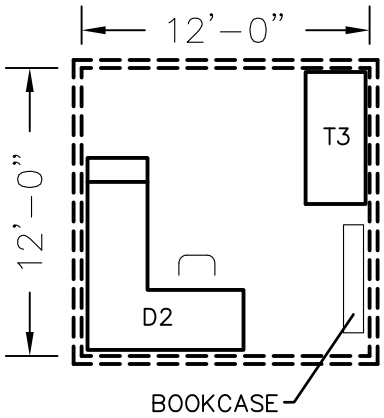

CONSTRUCTION ENGINEER

12' x 12' = 144 SF

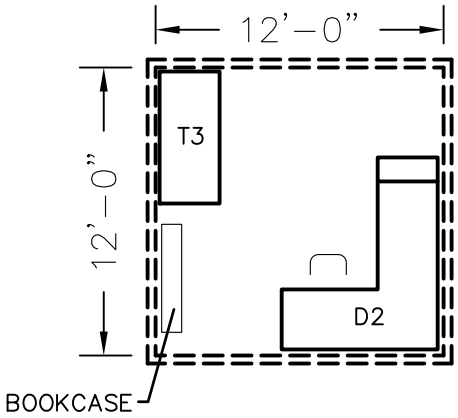

CONSTRUCTION ENGINEER

12' x 12' = 144 SF

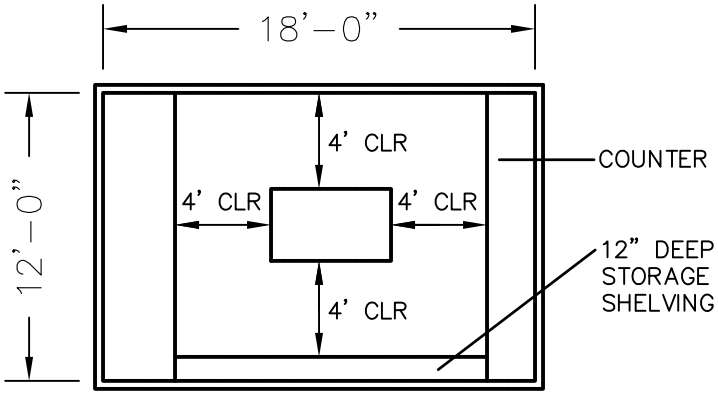

ENGINEERING WORK AREA

12' x 18' = 216 SF

ENGINEERING

Engineering Work Area

City of Rochester

Department of Public Works

Scale: 1/8"=1'-0"

Sheet 4

WESTON & SAMPSON ENGINEERS, INC.

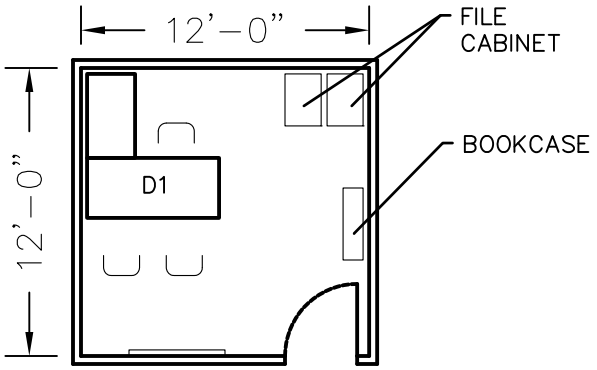

UTILITIES SUPERVISOR

12' x 12' = 144 SF

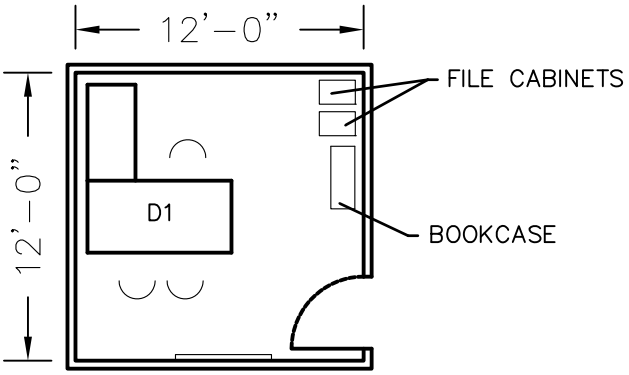

ROADS & FLEET SUPERVISOR

12' x 12' = 144 SF

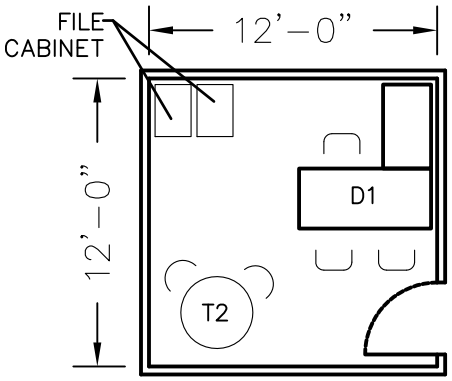

STORM WATER UTILITY SUPERVISOR

12' x 12' = 144 SF

(FUTURE)

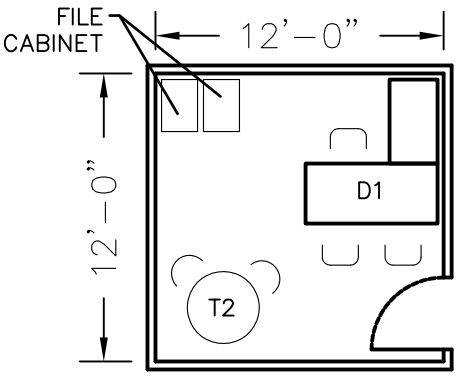

BUILDINGS & GROUND SUPERVISOR

12' x 12' = 144 SF

ADMINISTRATION

Supervisors Offices

City of Rochester

Department of Public Works

Scale: 1/8"=1'-0"

Sheet 5

WESTON & SAMPSON ENGINEERS, INC.

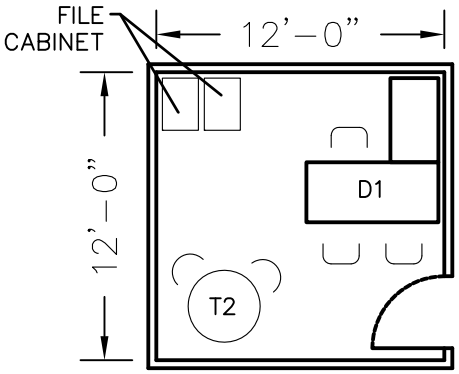

WATER CHIEF

12' x 12' = 144 SF

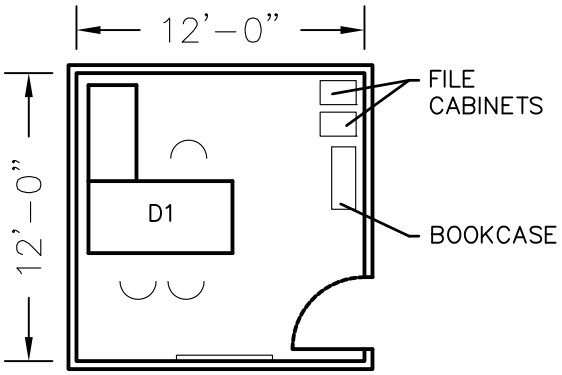

SEWER CHIEF

12' x 12' = 144 SF

ADMINISTRATION

CHIEF'S OFFICES

City of Rochester
Department of Public Works

Scale: 1/8"=1'-0" Sheet 6

WESTON & SAMPSON ENGINEERS, INC.

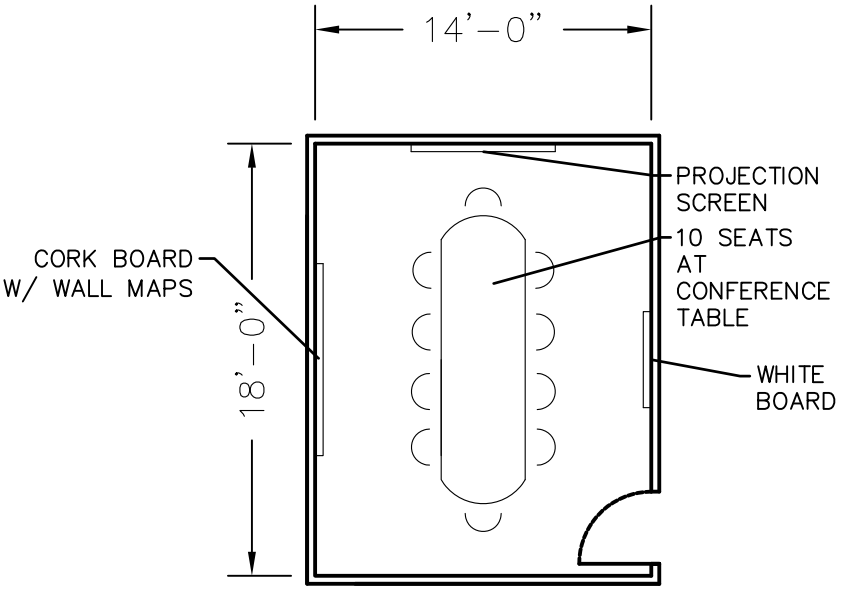

LARGE CONFERENCE ROOM

14' x 18' = 252 SF

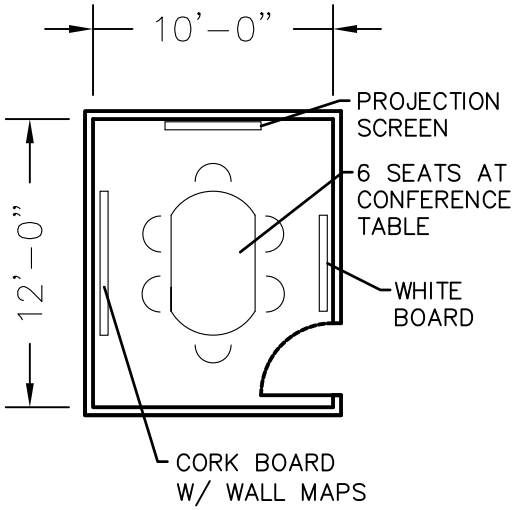

SMALL CONFERENCE ROOM

10' x 12' = 120 SF

ADMINISTRATION

CONFERENCE ROOMS

City of Rochester
Department of Public Works

Scale: 1/8"=1'–0" Sheet 7

WESTON & SAMPSON ENGINEERS, INC.

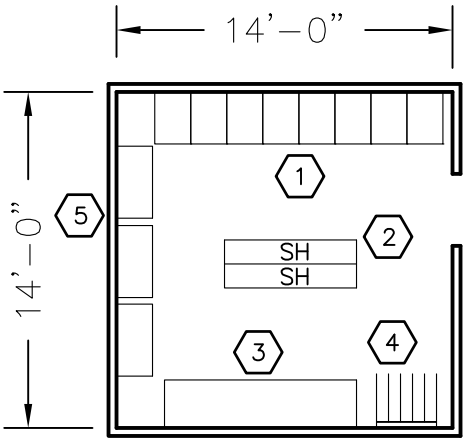

ACTIVE FILE STORAGE

14' x 14' = 196 SF

1. FILE CABINETS
2. HEAVY DUTY SHELVING (1' DEPTH)
3. HEAVY DUTY SHELVING (2' DEPTH)
4. HANGING PLAN FILE
5. LATERAL FILE CABINETS

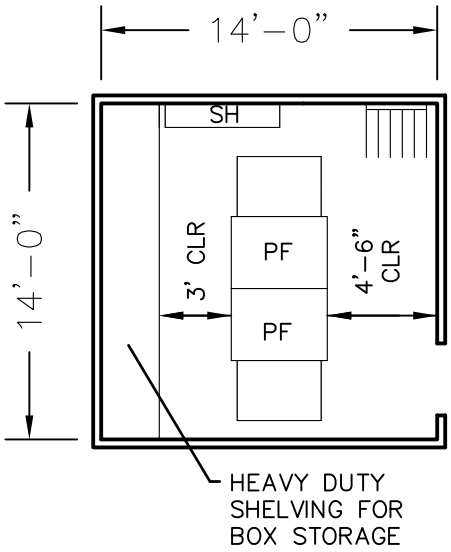

ARCHIVE FILE STORAGE

14' x 14' = 196 SF

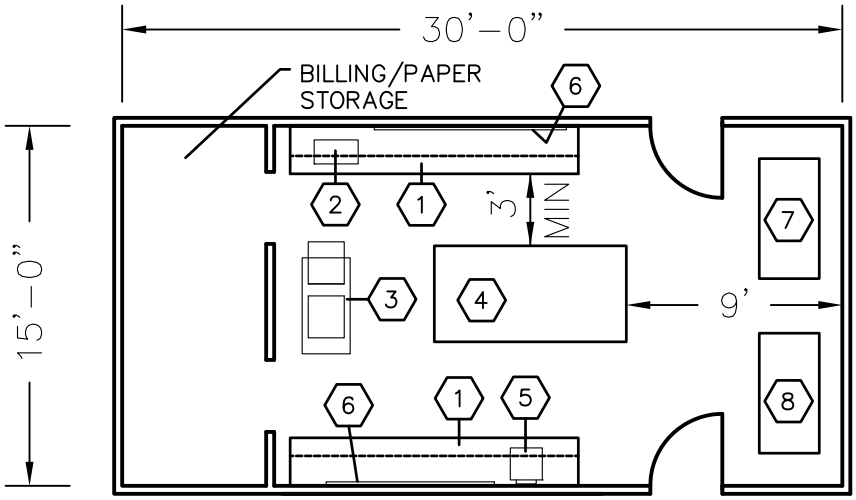

1. COUNTER (WITH SHELVING BELOW)
2. STAMP MACHINE
3. COPIER
4. 4'x8' LAYOUT TABLE W/FLAT FILES
5. FAX MACHINE
6. PLUG STRIP
7. LARGE DOCUMENT SCANNER
8. LARGE DOCUMENT COPIER

PLOTTER / PLAN ROOM

15' x 30' = 450 SF

ADMINISTRATION

Storage & Work Rooms

City of Rochester
Department of Public Works

Scale: 1/8"=1'-0" Sheet 8

WESTON & SAMPSON ENGINEERS, INC.

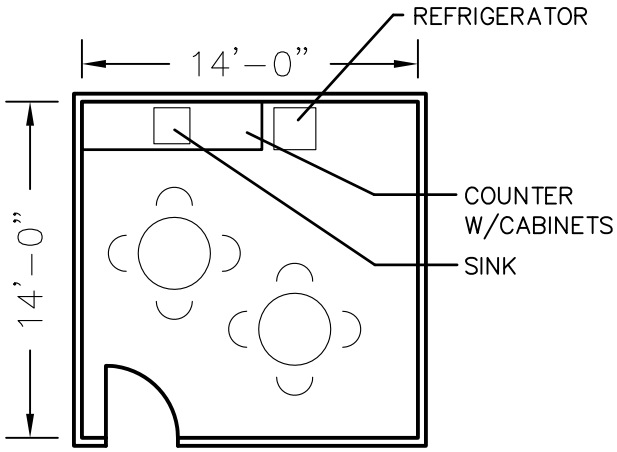

ADMINISTRATION BREAK ROOM

14' x 14' = 196 SF

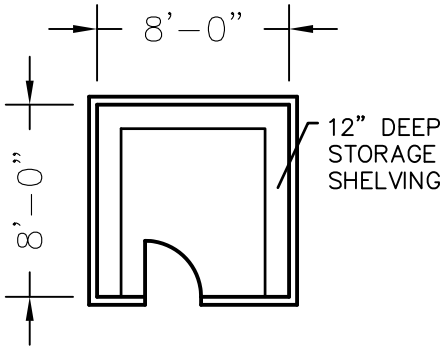

SUPPLY CLOSET

8' x 8' = 64 SF

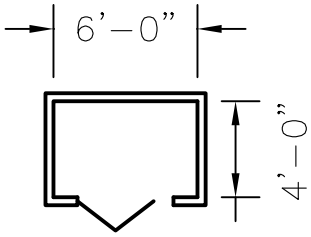

GENERAL CLOSET

4' x 6' = 24 SF

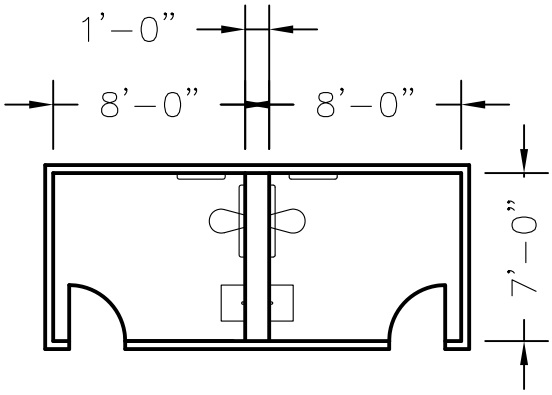

ADMINISTRATION TOILET FACILITIES

7' x 17' = 119 SF

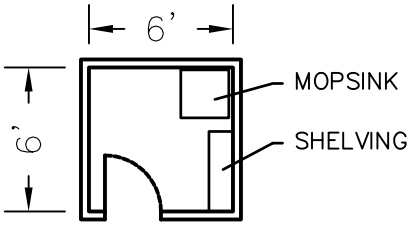

JANITOR CLOSET

6' x 6' = 36 SF

ADMINISTRATION

Break & Support Rooms

City of Rochester
Department of Public Works

Scale: 1/8"=1'–0" Sheet 9

WESTON & SAMPSON ENGINEERS, INC.

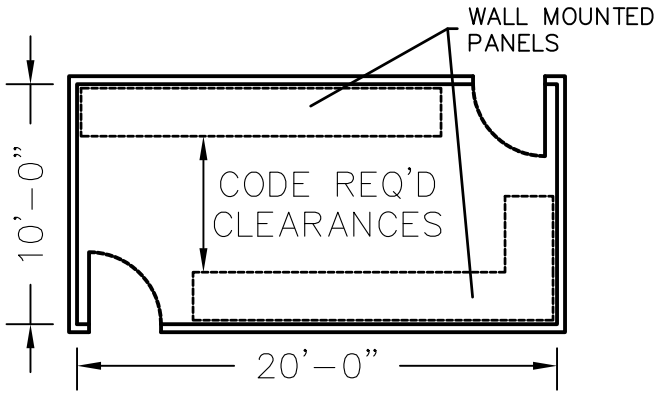

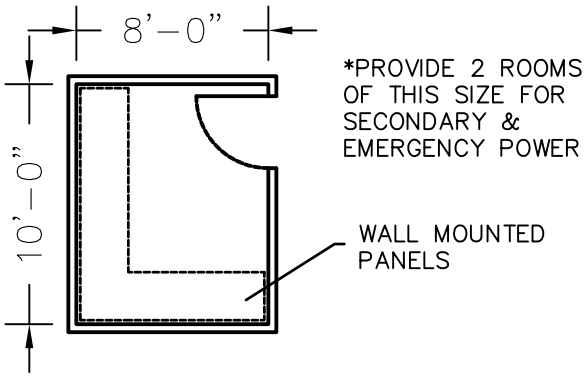

ELECTRIC ROOMS

20' x 10' = 200 SF
10' x 8' = 80 SF

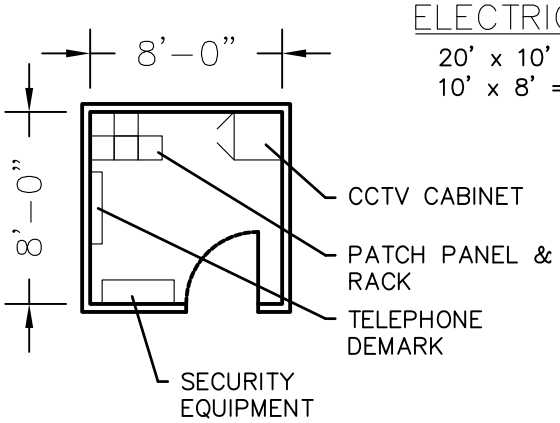

TELEPHONE/DATA ROOM

10' x 10' = 100 SF

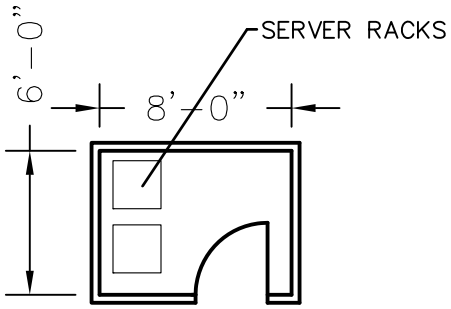

SERVER ROOM

6' x 8' = 48 SF

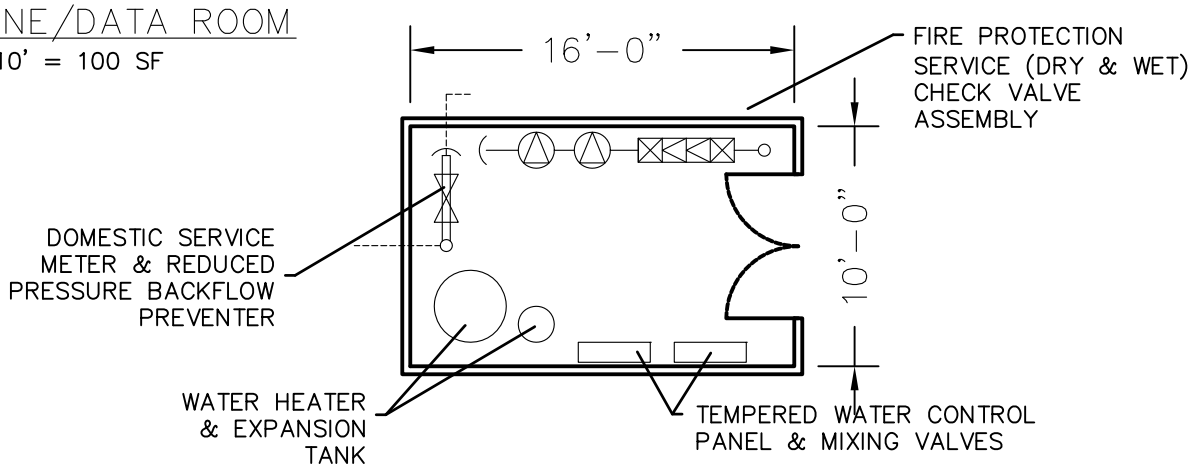

PLUMBING/FIRE PROTECTION ROOM

10' x 16' = 160 SF

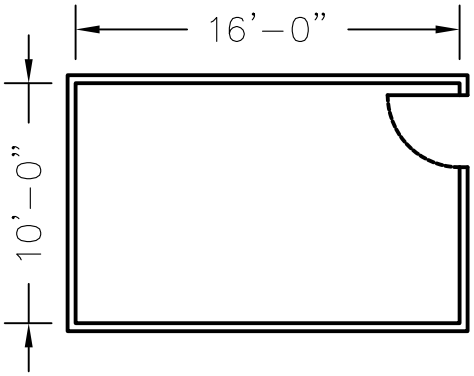

MECHANICAL ROOM

16' x 10' = 160 SF

WESTON & SAMPSON ENGINEERS, INC.

BUILDING SUPPORT

Utility Rooms

City of Rochester
Department of Public Works

Scale: 1/8"=1'-0"

Sheet 10

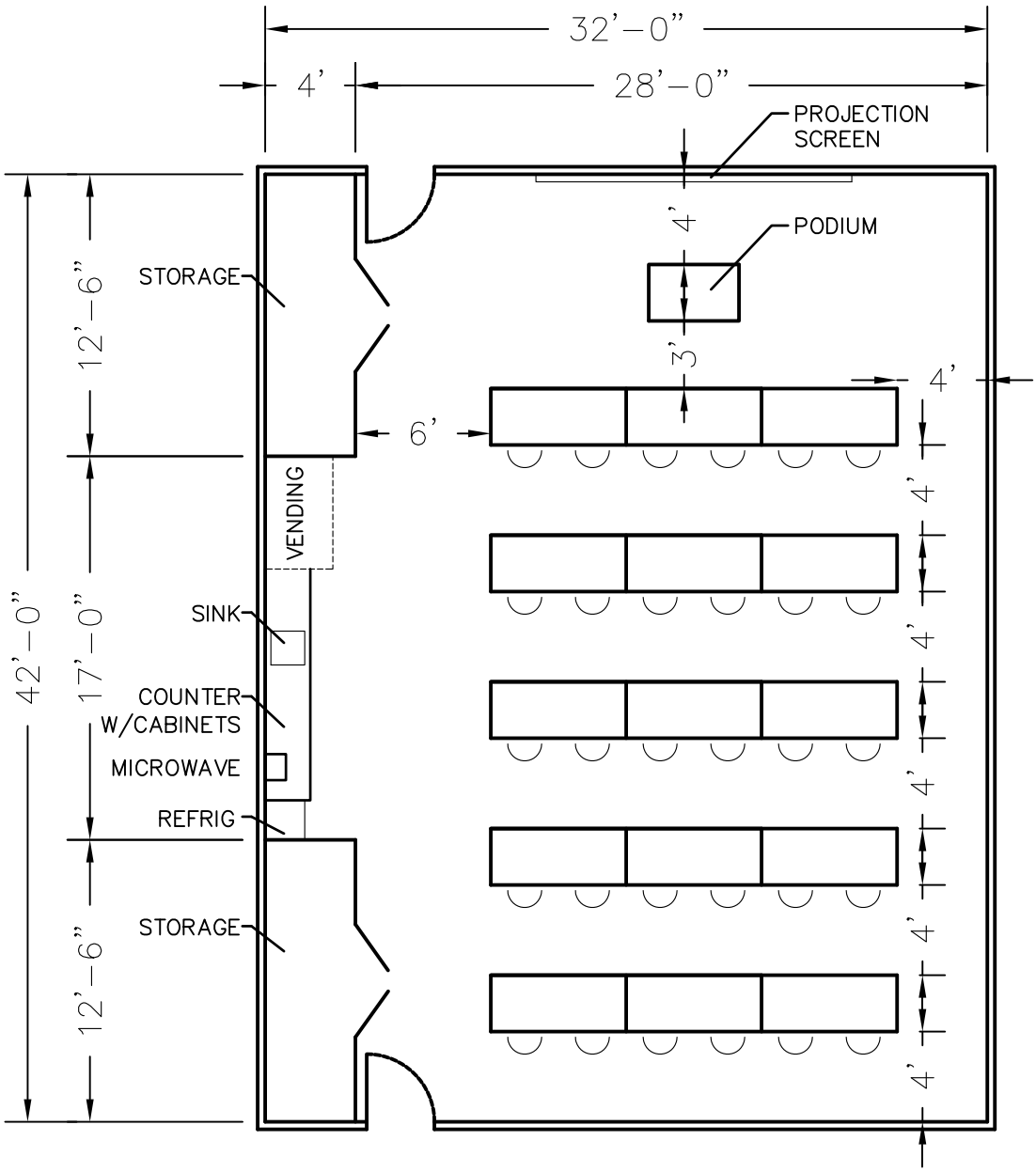

TRAINING/MEETING/MUSTER ROOM

32' x 42' = 1,344 SF

1. SIZED TO ACCOMMODATE 30 EMPLOYEES FOR TRAINING AT ONE TIME
2. CAN ALSO BE USED FOR STORM EVENT ROOM

EMPLOYEE FACILITIES

Workforce Muster/Training

City of Rochester
Department of Public Works

Scale: 1/8"=1'-0" Sheet 11

WESTON & SAMPSON ENGINEERS, INC.

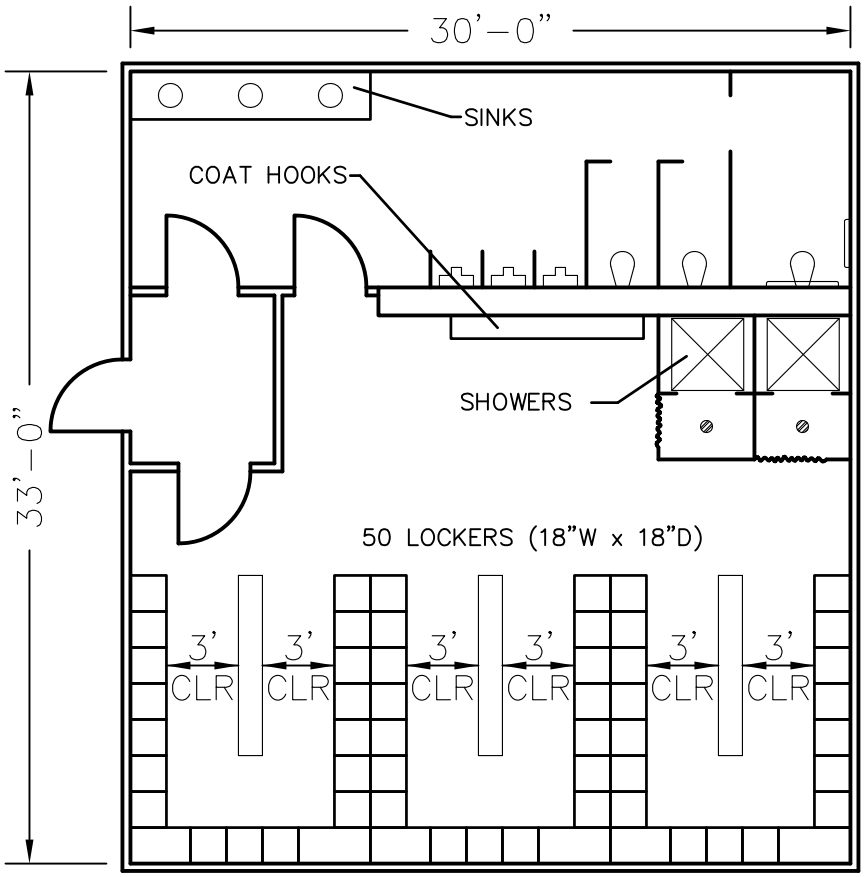

MALE LOCKER/SHOWER/TOILET

33' x 30' = 990 SF

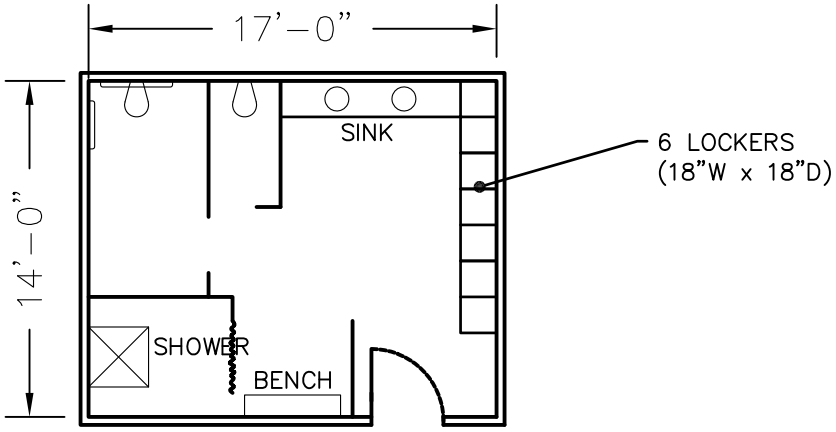

FEMALE LOCKER/SHOWER/TOILET

17' x 14' = 238 SF

EMPLOYEE FACILITIES

Locker Rooms

City of Rochester
Department of Public Works

Scale: 1/8"=1'-0" Sheet 12

WESTON & SAMPSON ENGINEERS, INC.

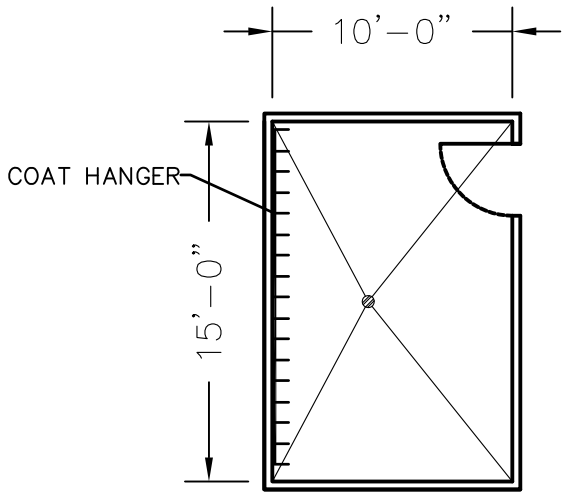

MUD ROOM

10' x 15' = 150 SF

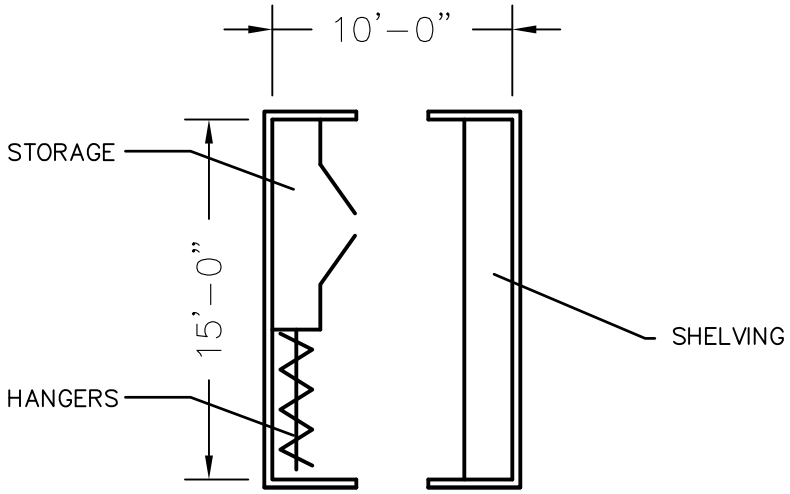

SUPPLY/UNIFORM STORAGE

10' x 15' = 150 SF

EMPLOYEE FACILITIES

Storage Rooms

City of Rochester
Department of Public Works

Scale: 1/8"=1'-0" Sheet 13

WESTON & SAMPSON ENGINEERS, INC.

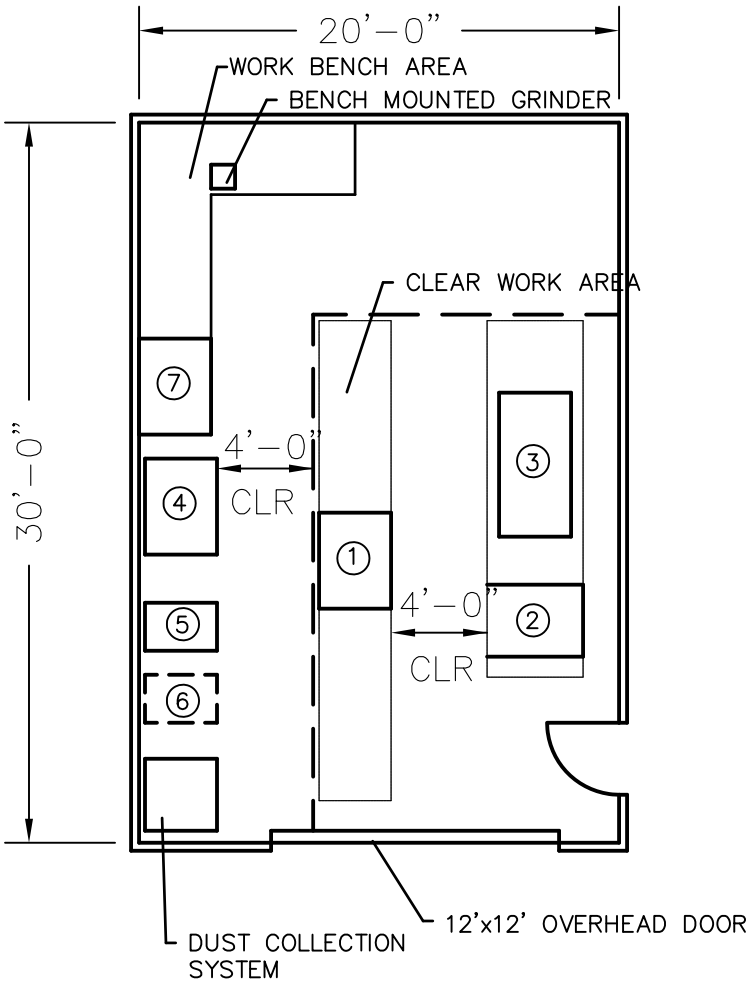

1. SMALL TABLE SAW
2. LARGE TABLE SAW
3. WORK BENCH
4. CHOP SAW
5. CHOP SAW
6. DRILL PRESS
7. PEDESTAL GRINDER

HIGHWAY WORKSHOP/SIGN SHOP

20' x 30' = 600 SF

HIGHWAY

Highway Workshop/Sign Shop

City of Rochester
Department of Public Works

Scale: 1/8"=1'-0" Sheet 14

WESTON & SAMPSON ENGINEERS, INC.

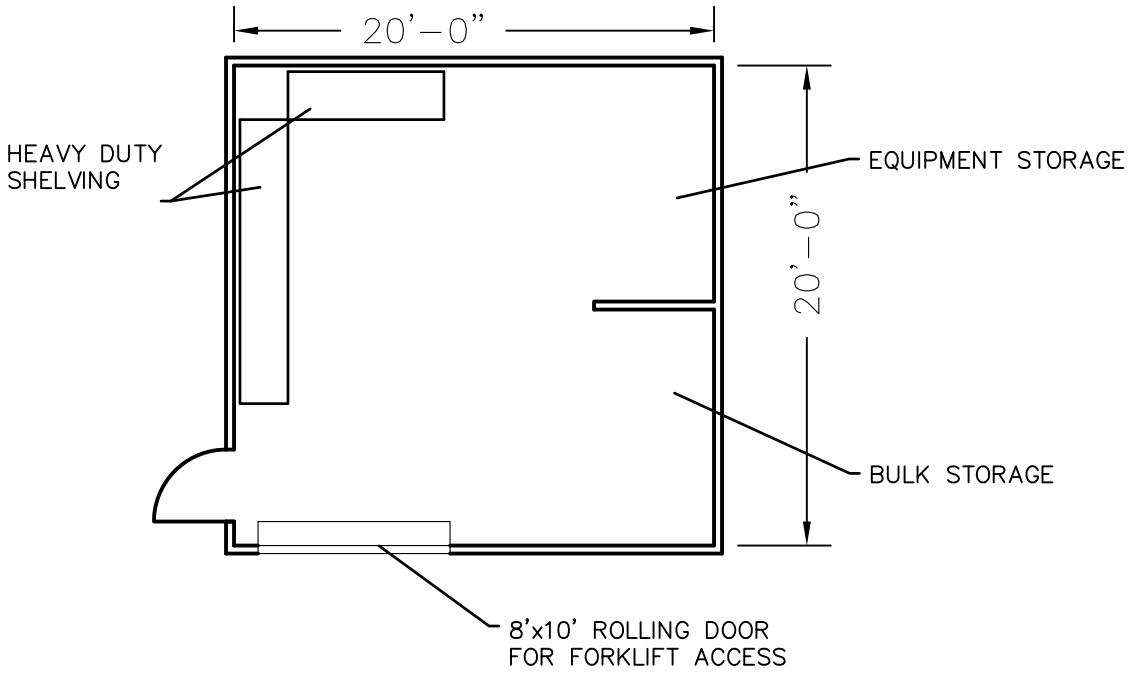

HIGHWAY STORAGE

20' x 20' = 400 SF

HIGHWAY

Highway Secure Storage

City of Rochester
Department of Public Works

Scale: 1/8"=1'-0" Sheet 15

WESTON & SAMPSON ENGINEERS, INC.

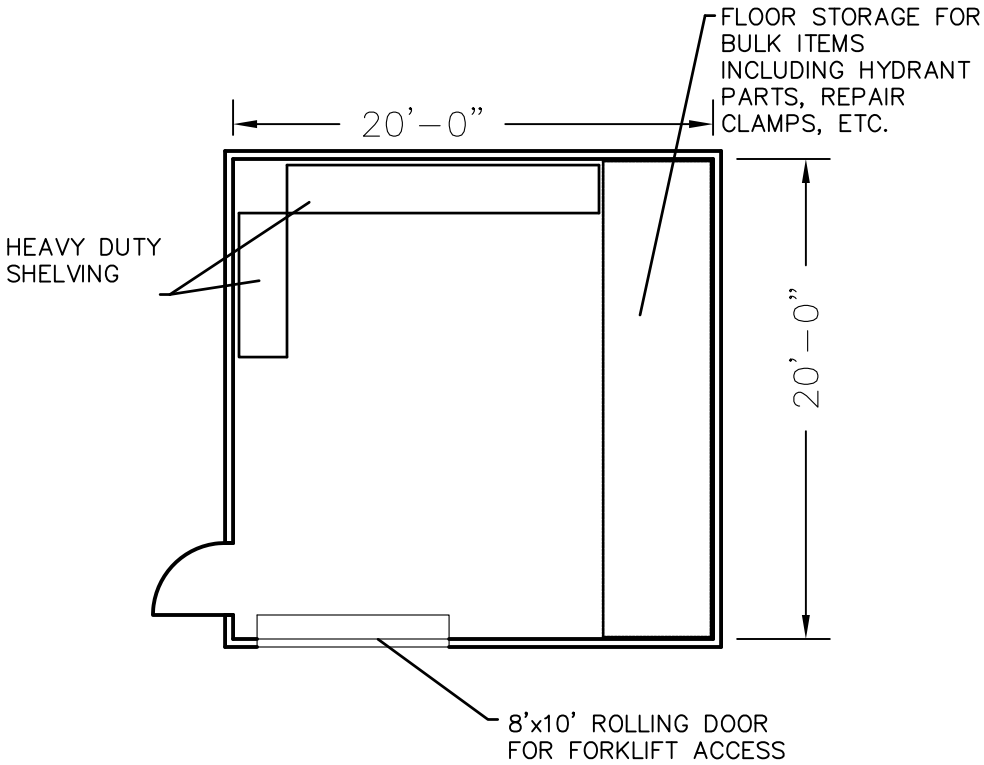

UTILITY SECURED MATERIAL STORAGE

20' x 20' = 400 SF

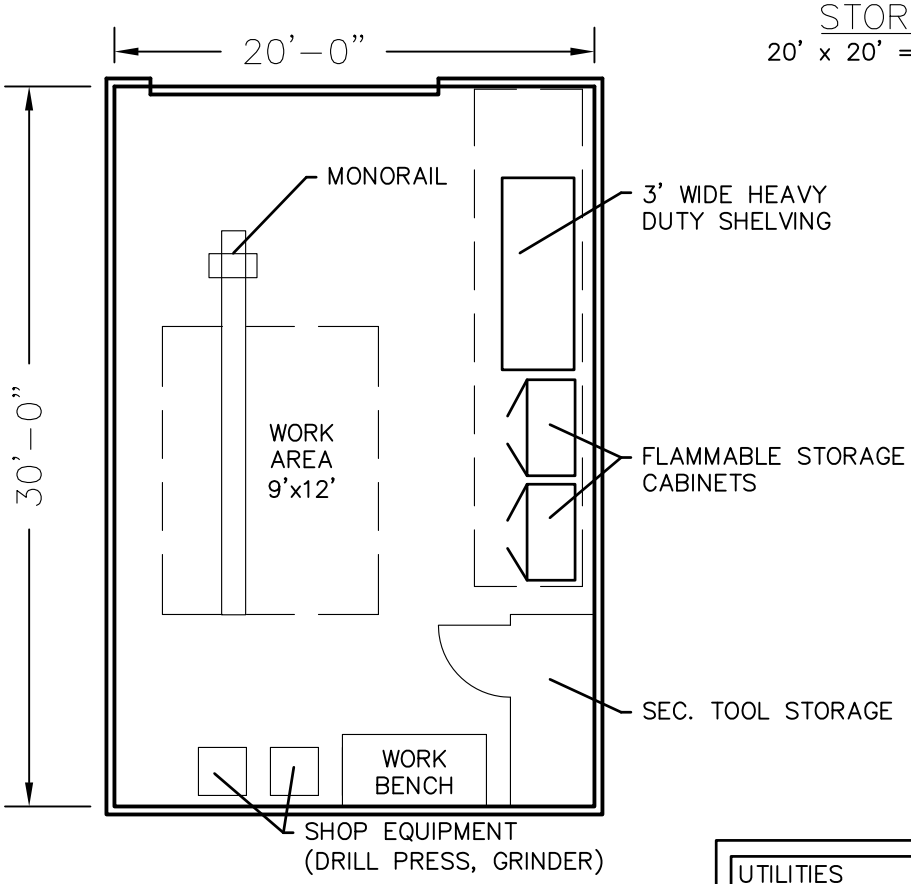

UTILITIES WORKSHOP

20' x 30' = 600 SF

UTILITIES

Utilities Storage & Wrkshp

City of Rochester
Department of Public Works

Scale: 1/8"=1'-0" Sheet 16

WESTON & SAMPSON ENGINEERS, INC.

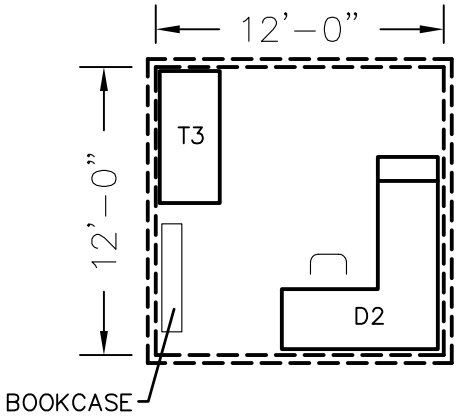

WATER LEAD OFFICE

12' x 12' = 144 SF

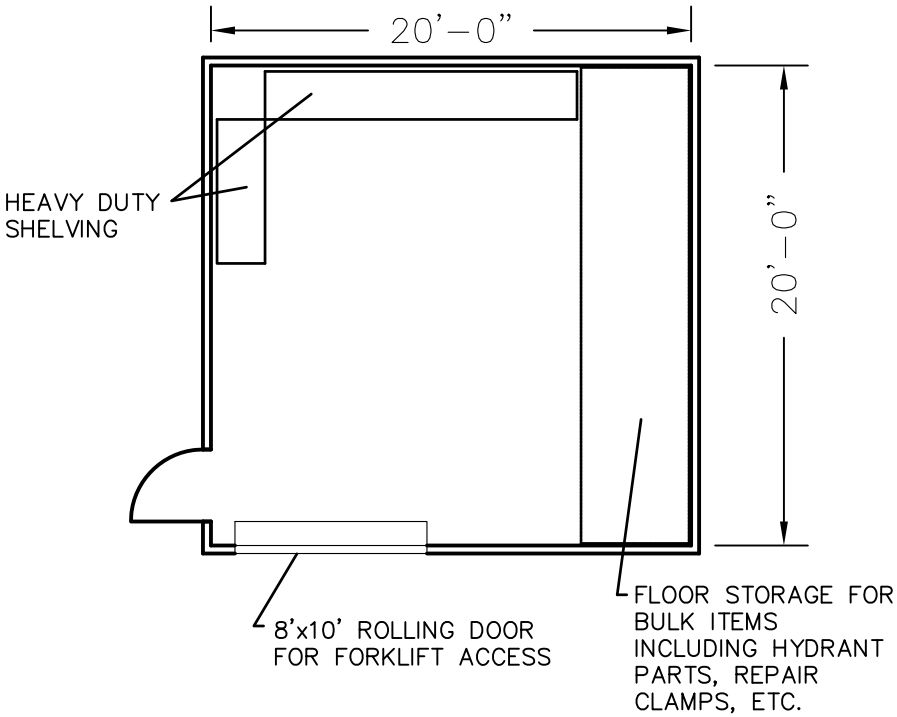

WATER SECURED MATERIAL STORAGE

20' x 20' = 400 SF

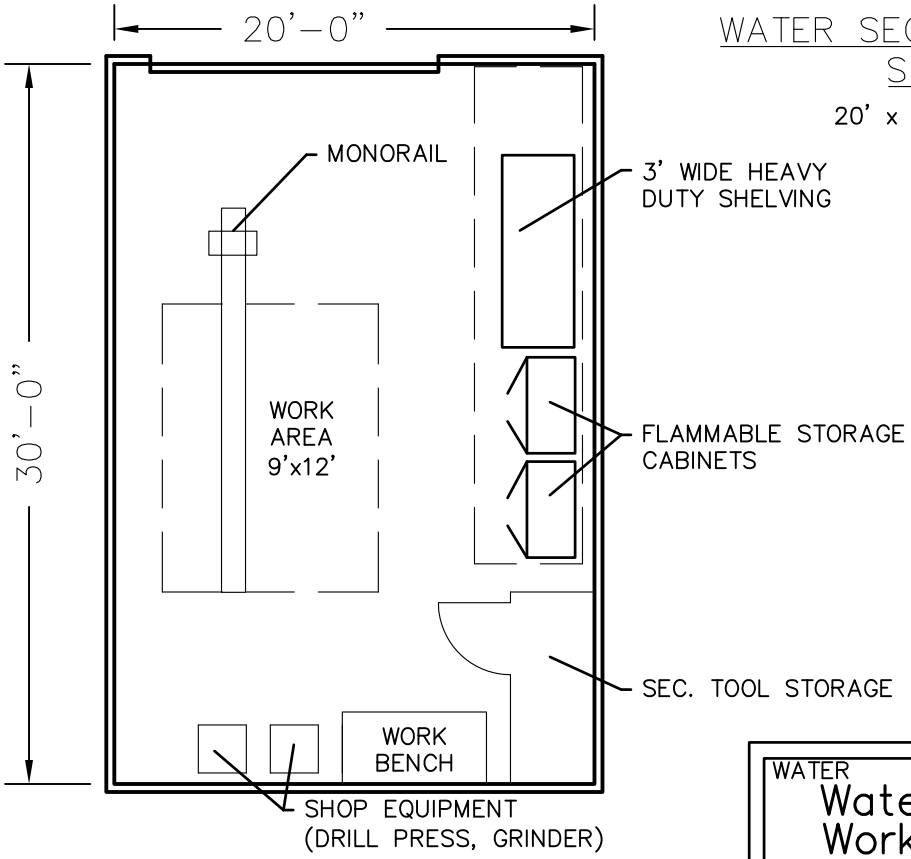

WATER WORKSHOP

20' x 30' = 600 SF

WATER

Water Storage, Workshop & Offices

City of Rochester
Department of Public Works

Scale: 1/8"=1'-0"

Sheet 17

WESTON & SAMPSON ENGINEERS, INC.

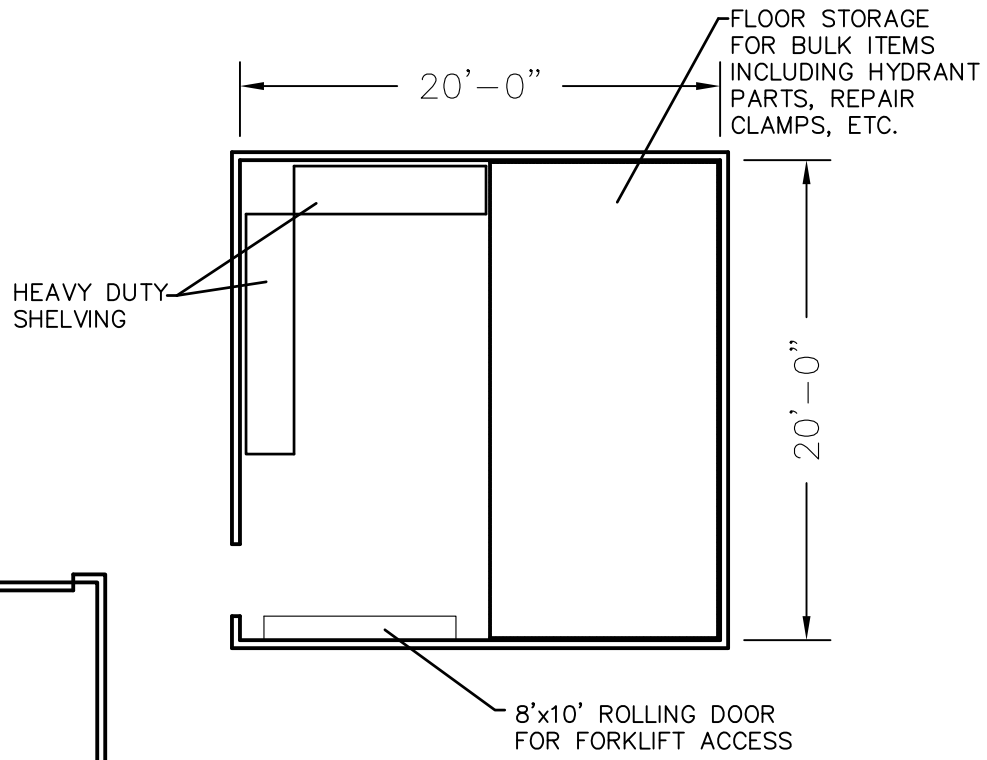

SEWER ENGINEERING FIELD EQUIPMENT STORAGE

20' x 20' = 400 SF

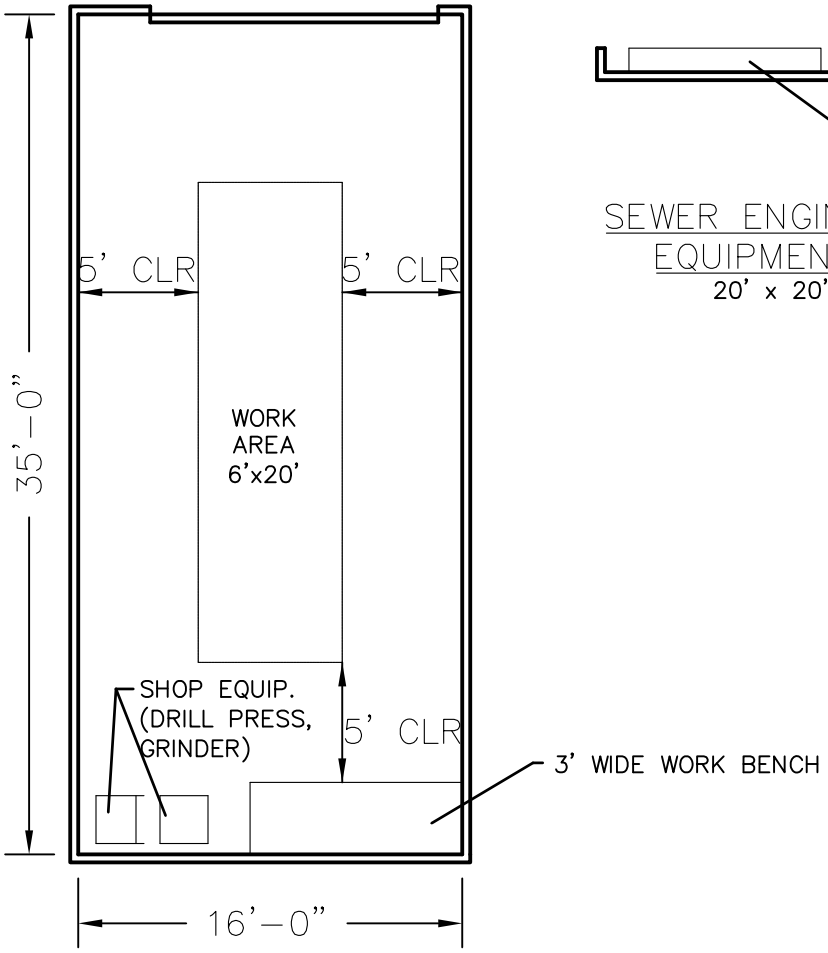

SEWER EQUIPMENT MAINTENANCE WORKSHOP

16' x 35' = 560 SF

SEWER

Sewer Storage Workshop

City of Rochester
Department of Public Works

Scale: 1/8"=1'-0"

Sheet 18

WESTON & SAMPSON ENGINEERS, INC.

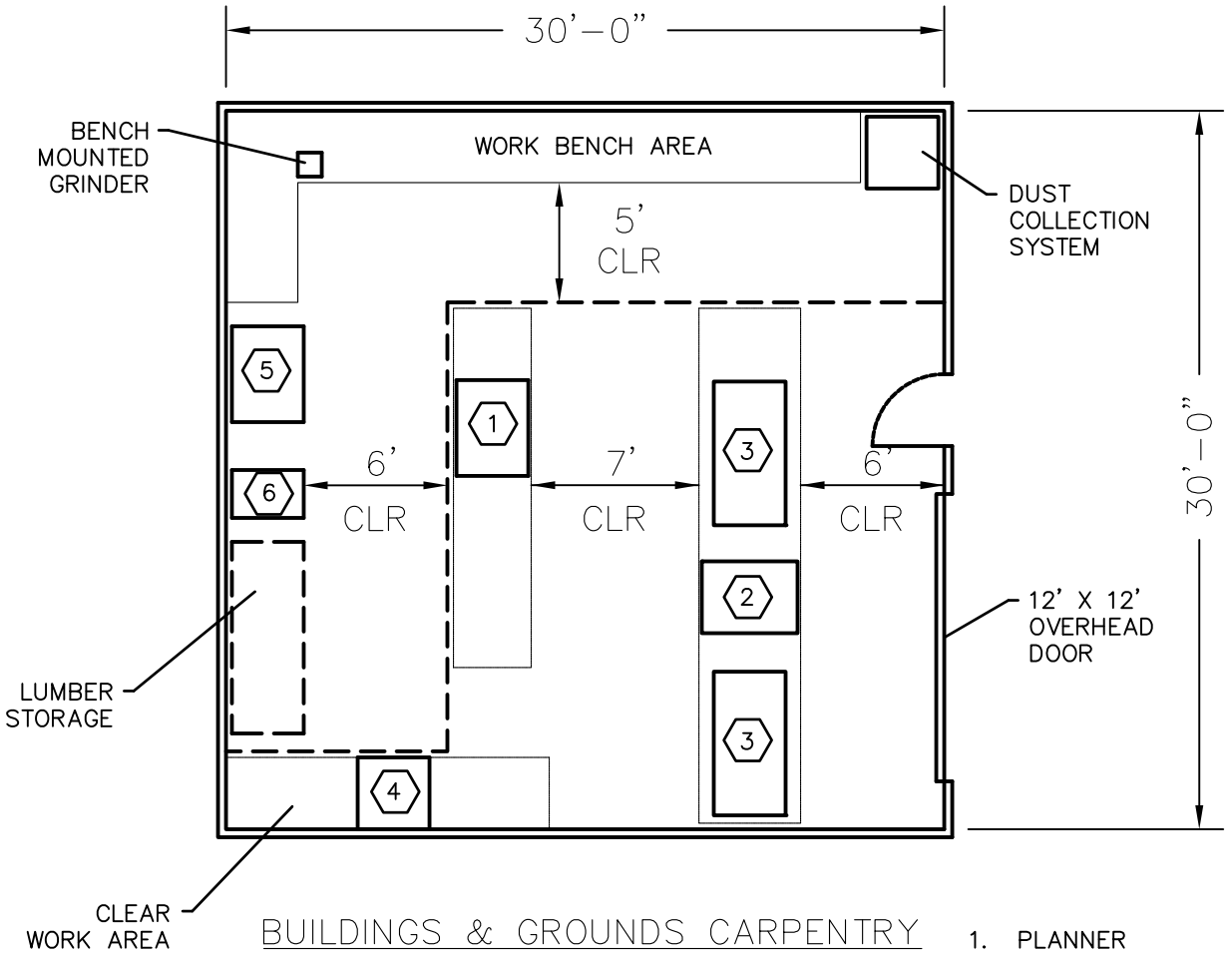

BUILDINGS & GROUNDS CARPENTRY SHOP

30' x 30' = 900 SF

1. PLANNER
2. TABLE SAW
3. WORK BENCH
4. RADIAL ARM SAW
5. JOINTER
6. DRILL PRESS

BUILDING AND GROUNDS

B & G Carpentry Shop

City of Rochester
Department of Public Works

Scale: 1/8"=1'–0" Sheet 19

WESTON & SAMPSON ENGINEERS, INC.

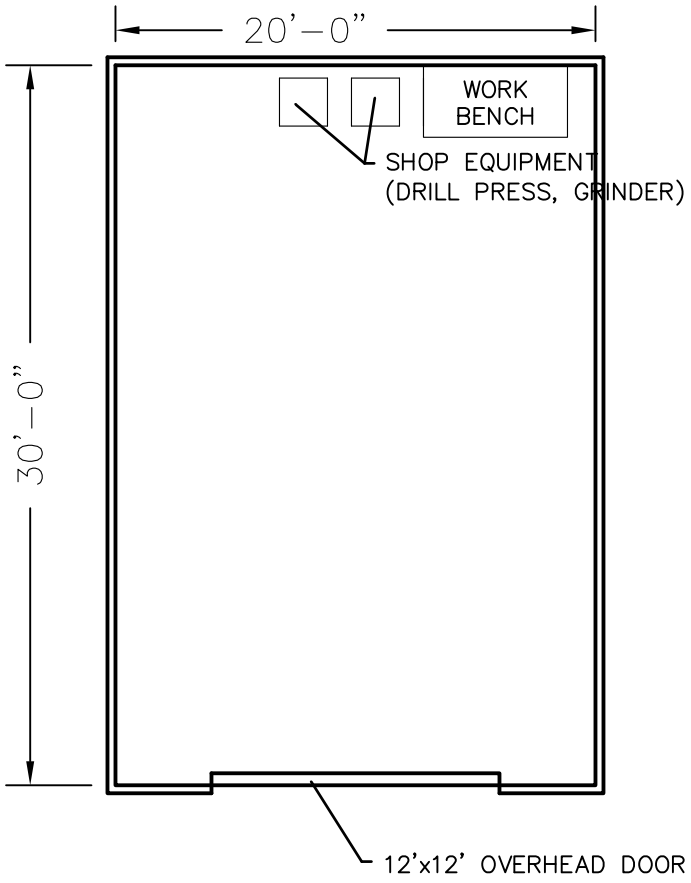

BUILDINGS & GROUNDS
EQUIPMENT STORAGE

20' x 30' = 600 SF

BUILDINGS AND GROUNDS

B & G Equipment Storage

City of Rochester
Department of Public Works

Scale: 1/16"=1'-0" Sheet 20

WESTON & SAMPSON ENGINEERS, INC.

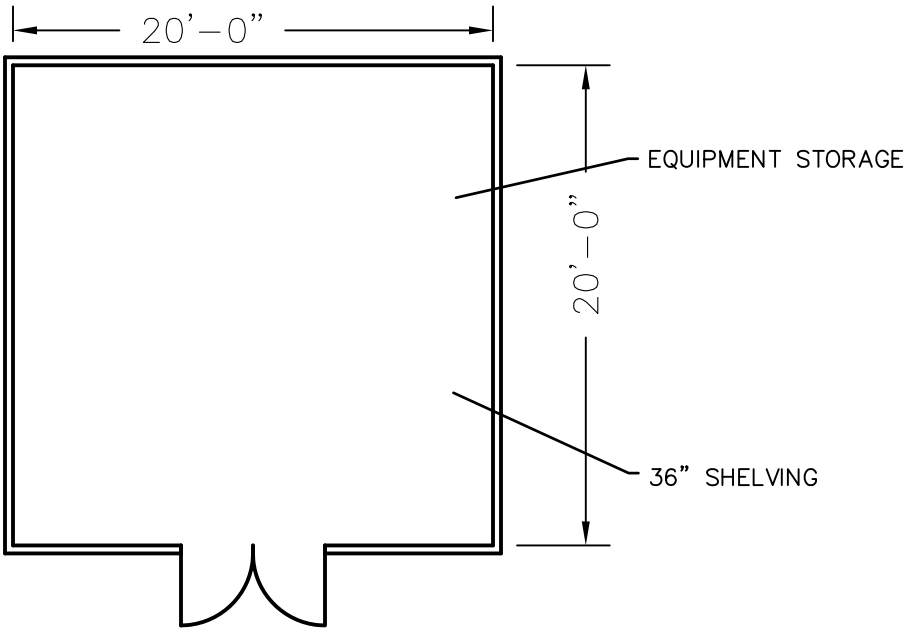

BUILDING AND GROUNDS
STOCK ROOM
20' x 20' = 400 SF

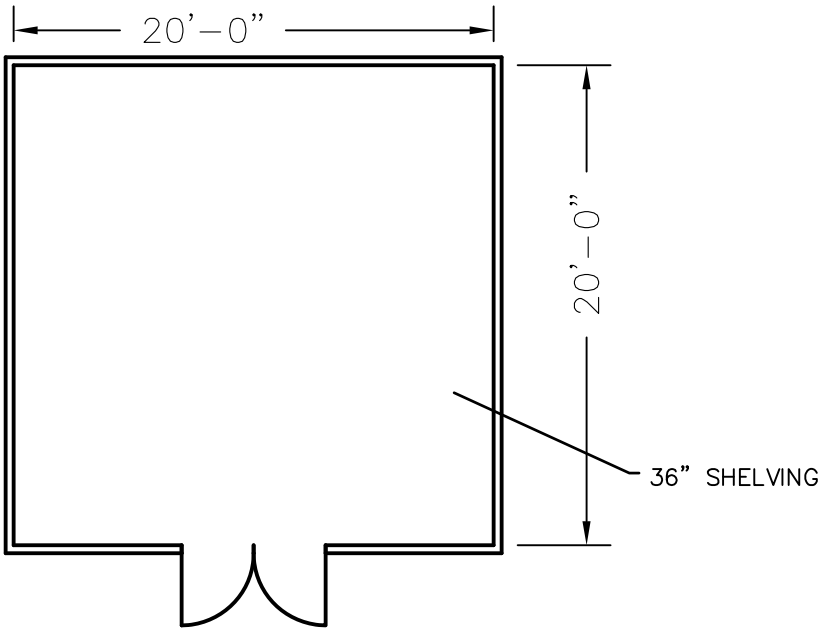

BUILDING AND GROUNDS
STORAGE
20' x 20' = 400 SF

BUILDINGS AND GROUNDS

B & G General Storage

City of Rochester
Department of Public Works

Scale: 1/8"=1'-0" Sheet 21

WESTON & SAMPSON ENGINEERS, INC.

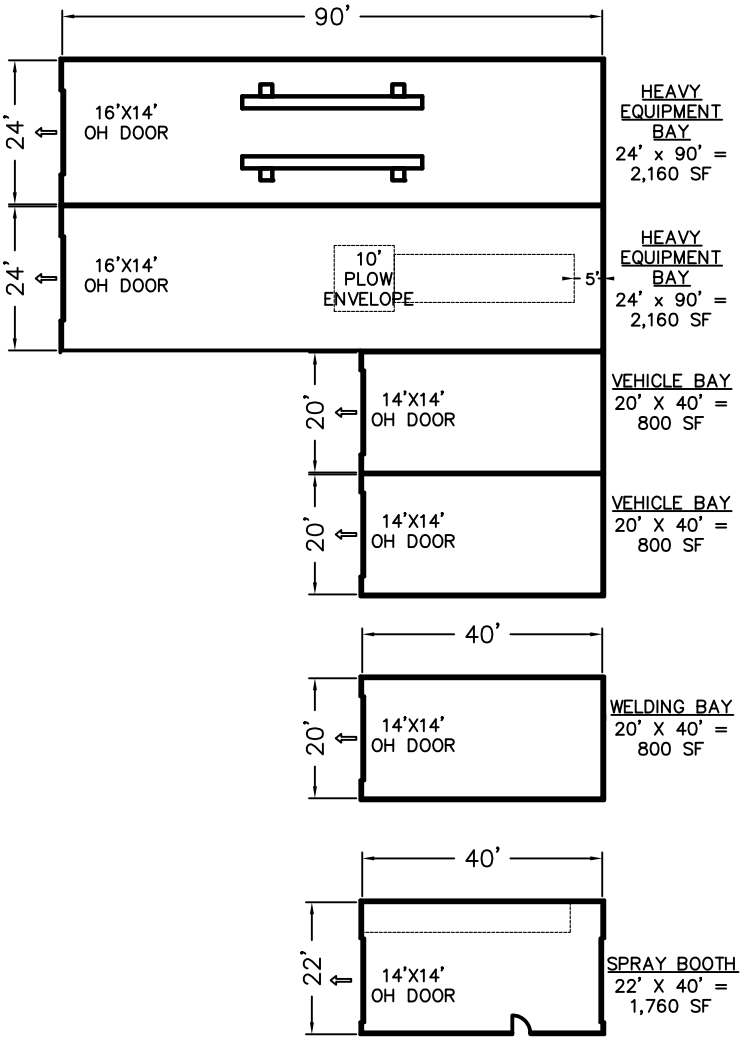

VEHICLE / EQUIPMENT
MAINTENANCE BAYS

8,480 SF

MAINTENANCE

Maintenance Bays

City of Rochester
Department of Public Works

Scale: 1/32"=1'-0" Sheet 22

WESTON & SAMPSON ENGINEERS, INC.

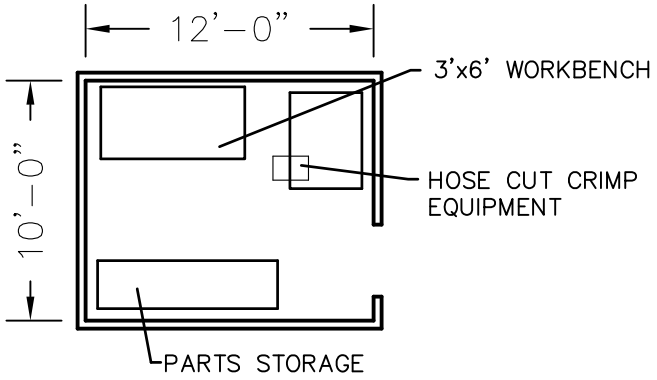

HYDRAULIC HOSE WORKSHOP

12' x 12' = 120 SF

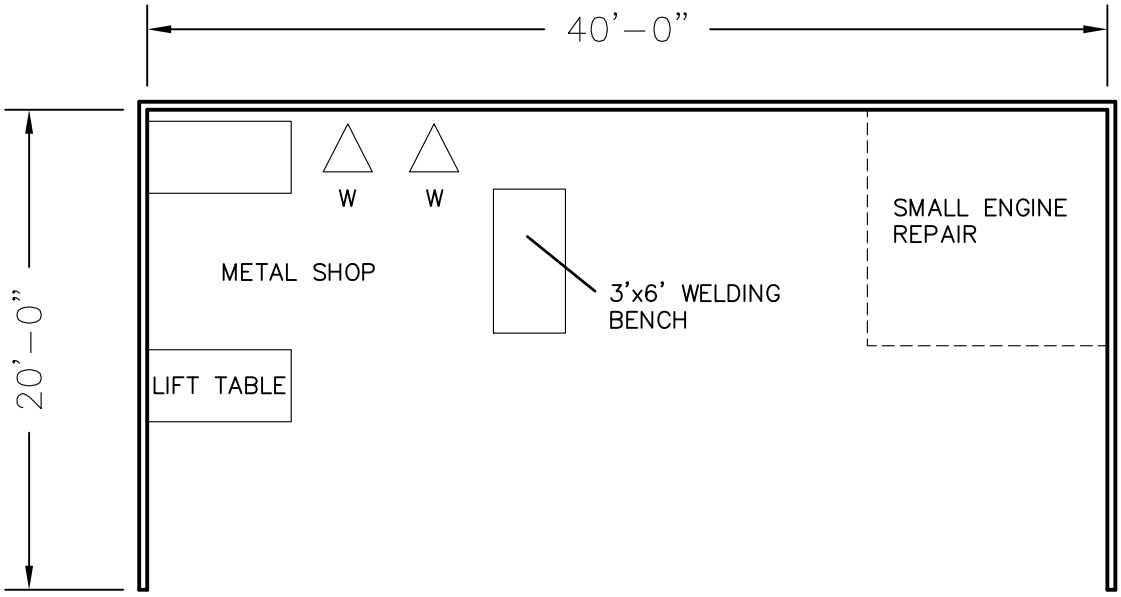

MAINTENANCE WORKSHOP/SMALL ENGINE REPAIR

20' x 40' = 800 SF

MAINTENANCE

Maintenance Workshops

City of Rochester
Department of Public Works

Scale: 1/8" = 1'–0" Sheet 23

WESTON & SAMPSON ENGINEERS, INC.

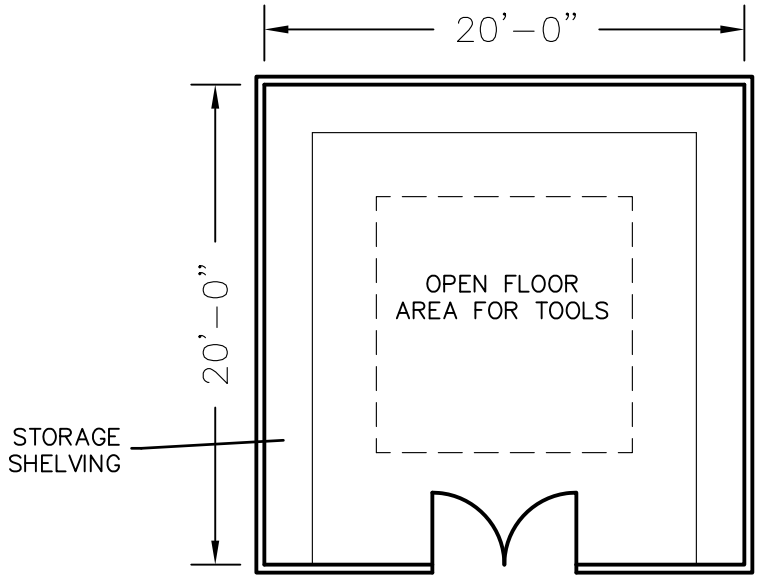

LARGE TOOL STORAGE AREA

20' x 20' = 400 SF

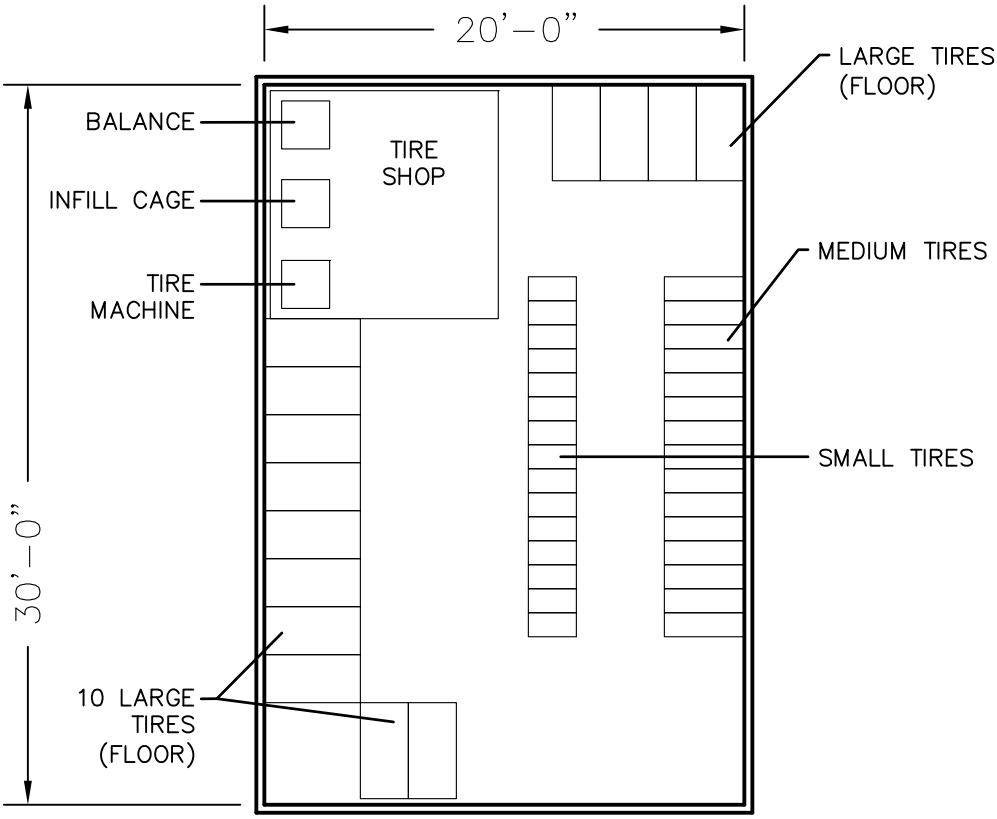

MAINTENANCE TIRE STORAGE

20' x 30' = 600 S.F.

MAINTENANCE

Tool & Tire Storage

City of Rochester
Department of Public Works

Scale: 1/8"=1'-0" Sheet 24

WESTON & SAMPSON ENGINEERS, INC.

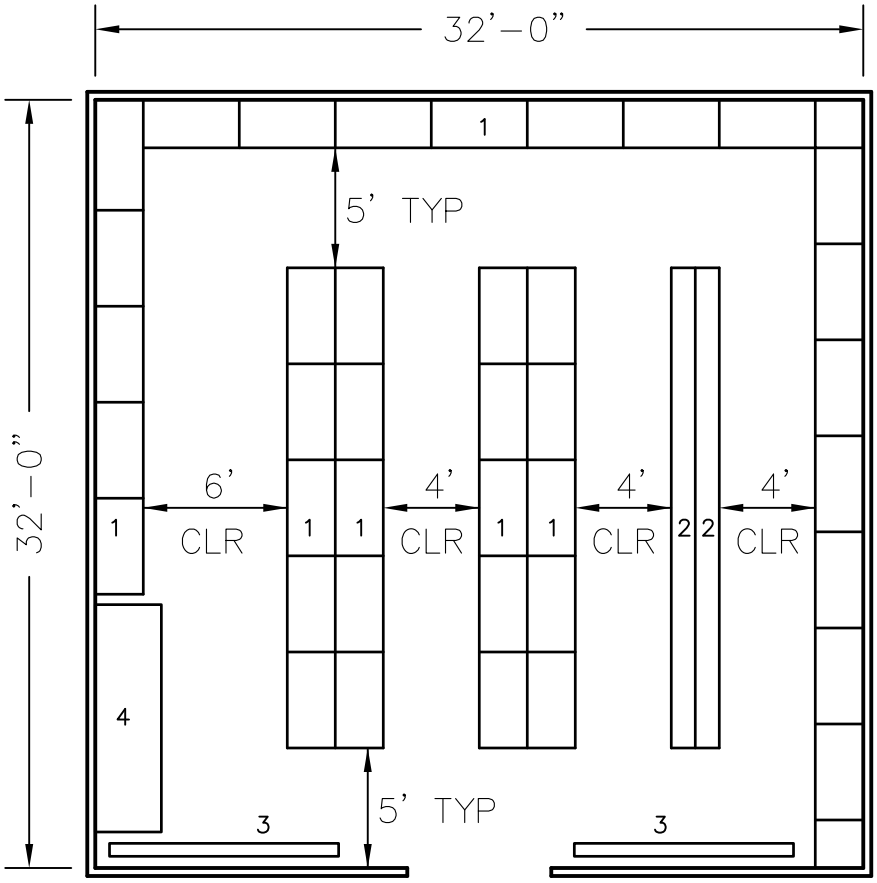

PARTS STORAGE ROOM

32' x 32' = 1,024 SF

NOTES:

1. 24" HEAVY DUTY SHELVING
2. SMALL PARTS BIN
3. WALL STORAGE (HANGING HOSES, BELTS, ETC.)
4. BULK FLOOR STORAGE
5. PROVIDE MIN. 1 – 24"x48" SHELF PER VEHICLE

MAINTENANCE

Parts Storage Room

City of Rochester
Department of Public Works

Scale: 1/8"=1'-0" Sheet 25

WESTON & SAMPSON ENGINEERS, INC.

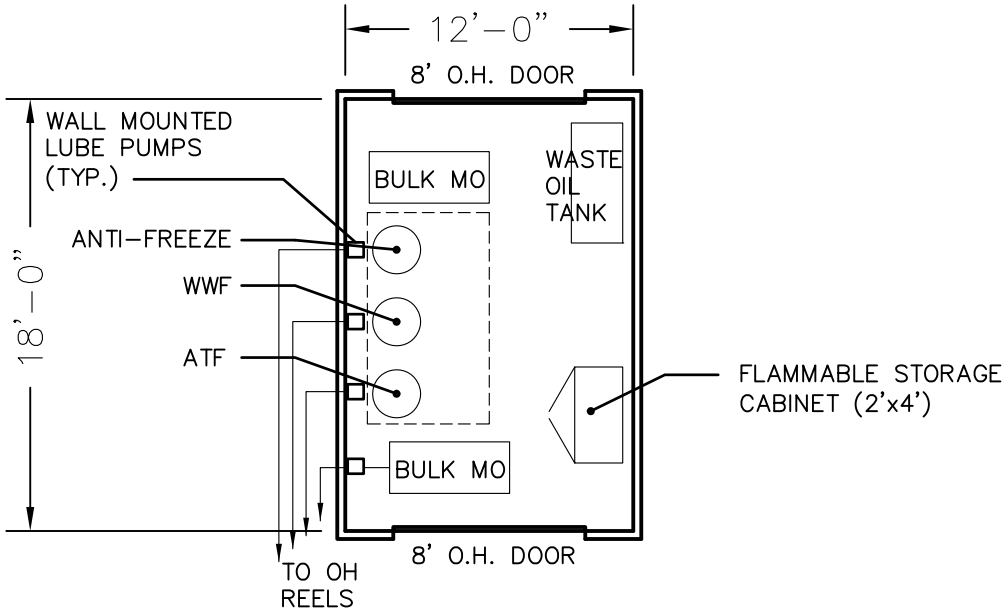

MAINTENANCE FLUID STORAGE ROOM

12' x 18' = 288 SF

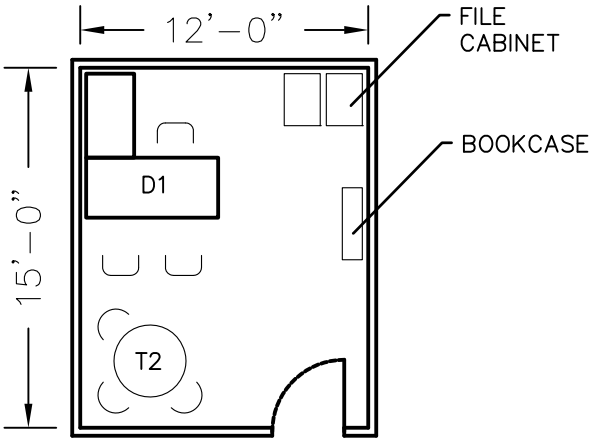

MAINTENANCE LEAD MECHANIC OFFICE

12' x 15' = 180 SF

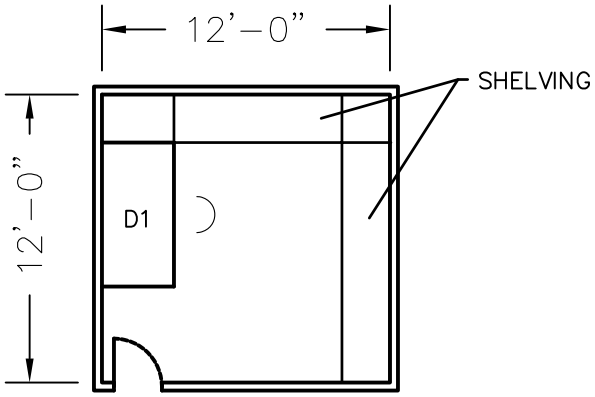

MAINTENANCE REFERENCE ROOM

12' x 12' = 120 SF

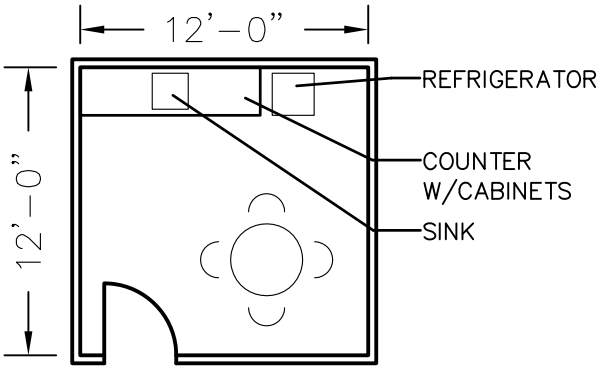

MAINTENANCE BREAK ROOM

12' x 12' = 144 SF

WESTON & SAMPSON ENGINEERS, INC.

MAINTENANCE

Maintenance Admin/Support

City of Rochester

Department of Public Works

Scale: 1/8"=1'-0"

Sheet 26

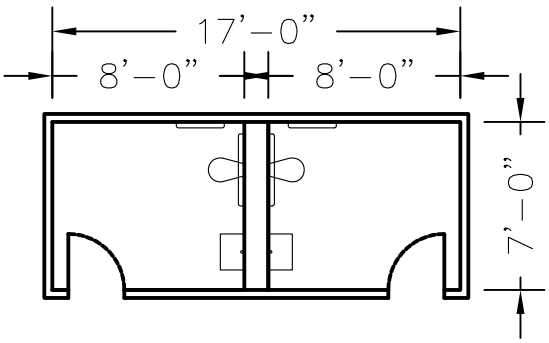

TOILET FACILITIES

7' x 17' = 119 SF

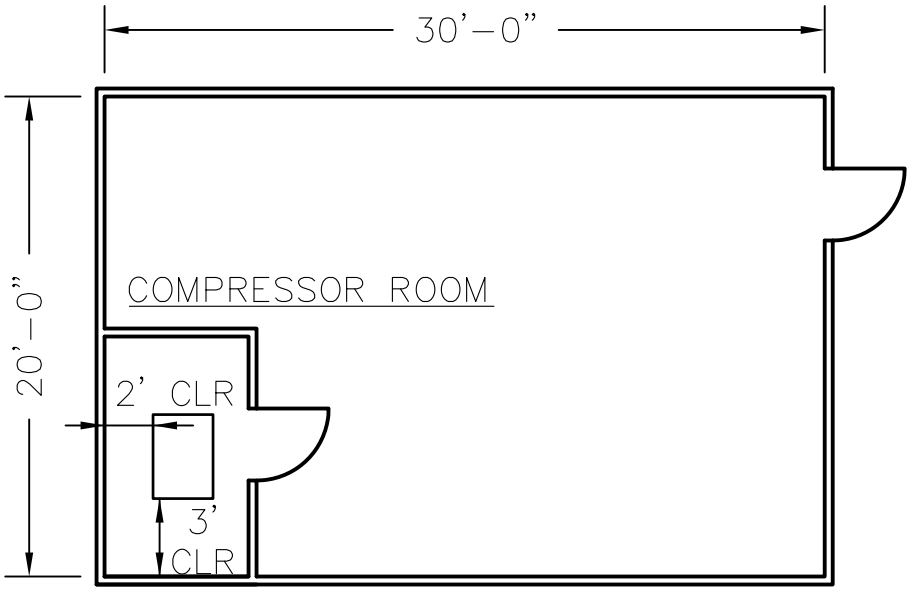

HVAC ROOM

20' x 30' = 600 SF

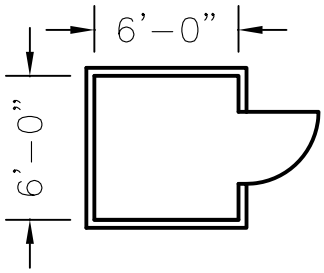

ELECTRICAL ROOM

6' x 6' = 36 SF

MAINTENANCE

Toilets & Compressor

City of Rochester
Department of Public Works

Scale: 1/8"=1'-0" Sheet 27

WESTON & SAMPSON ENGINEERS, INC.

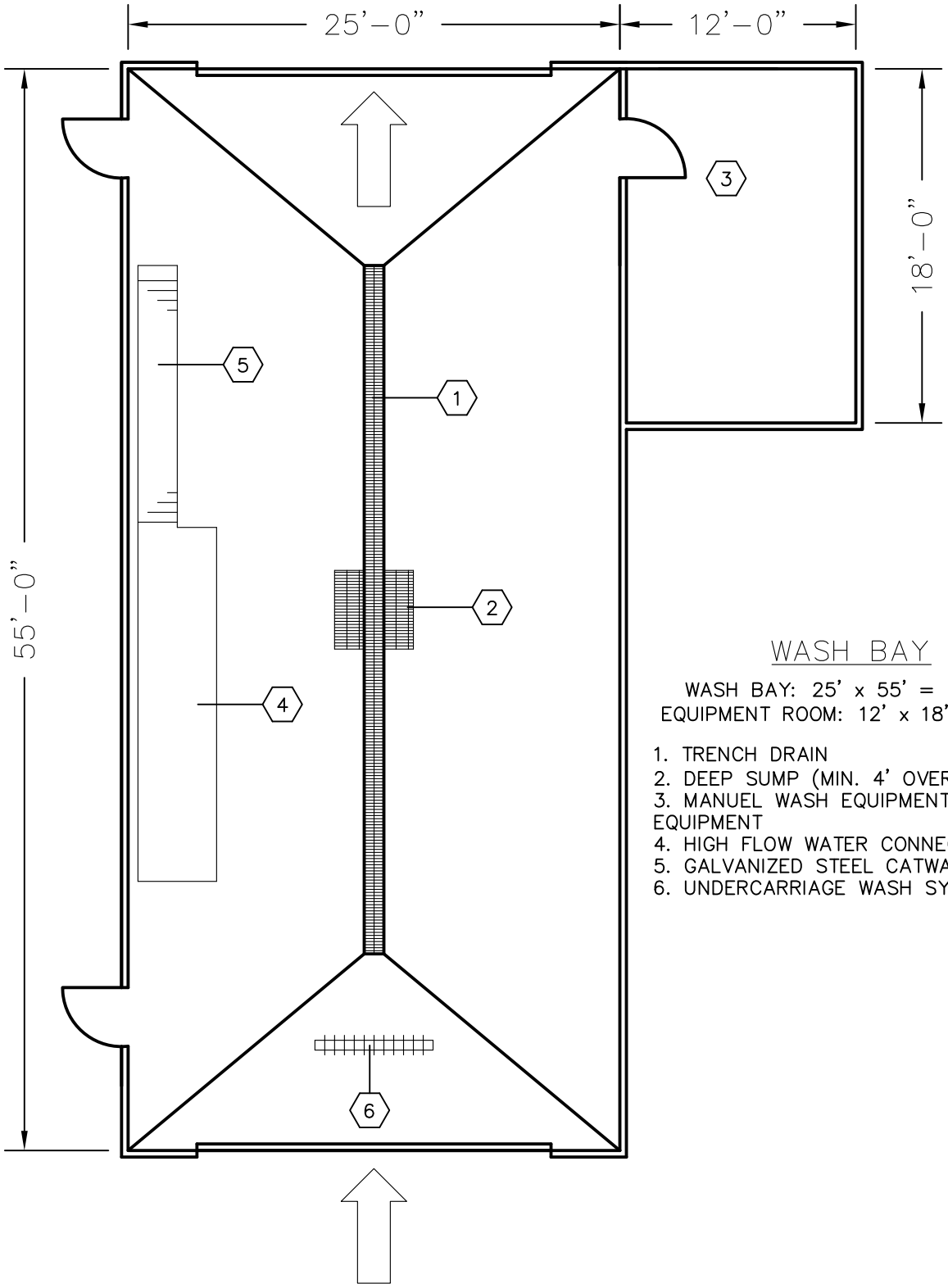

WASH BAY

WASH BAY: 25' x 55' = 1,375 SF
EQUIPMENT ROOM: 12' x 18' = 100 SF

1. TRENCH DRAIN
2. DEEP SUMP (MIN. 4' OVERBURDEN)
3. MANUEL WASH EQUIPMENT & RECLAIM EQUIPMENT
4. HIGH FLOW WATER CONNECTION
5. GALVANIZED STEEL CATWALK
6. UNDERCARRIAGE WASH SYSTEM

VEHICLE STORAGE

Wash Bay & Equipment

City of Rochester
Department of Public Works

Scale: 1/8"=1'-0"

Sheet 28

WESTON & SAMPSON ENGINEERS, INC.

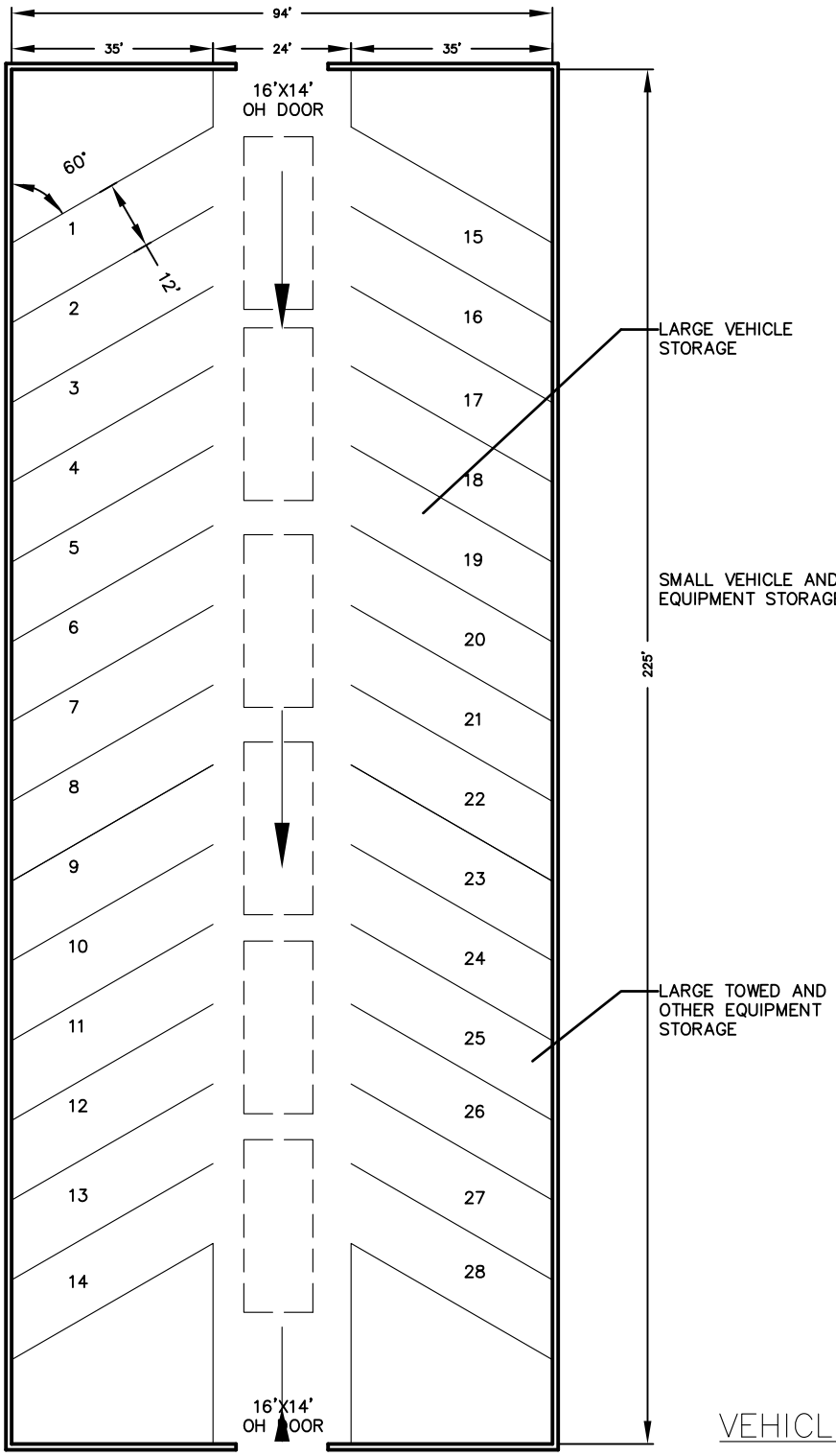

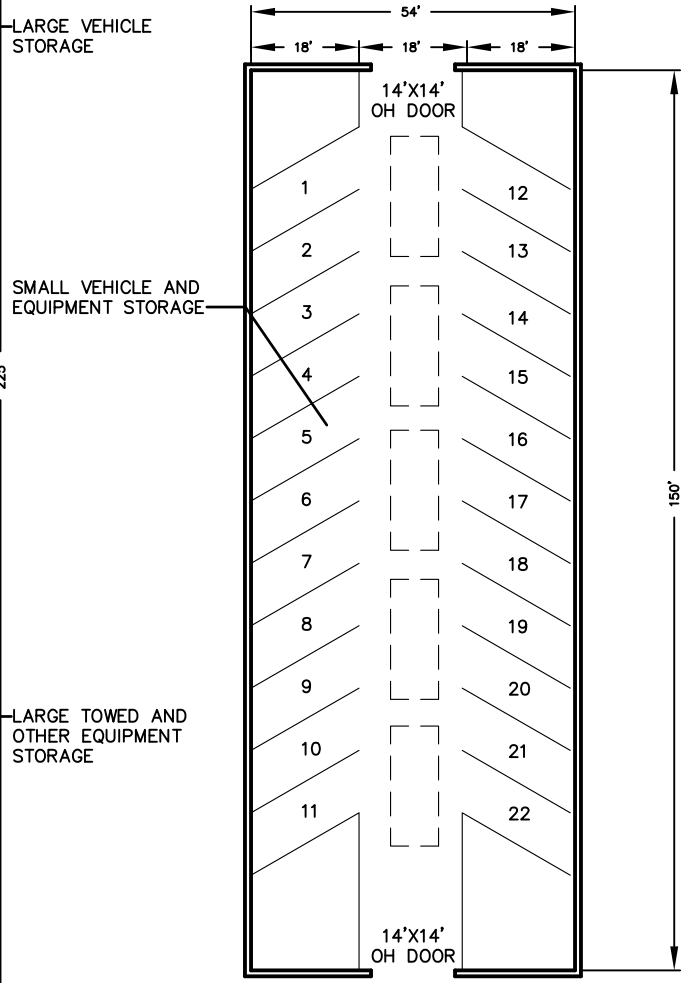

VEHICLE AND EQUIPMENT STORAGE

54' x 150' = 8,100 SF

VEHICLE AND EQUIPMENT STORAGE

95' x 226' = 21,375 SF

VEHICLE STORAGE TOTAL = 21,375 + 8,100= 29,475

WESTON & SAMPSON ENGINEERS, INC.

VEHICLE STORAGE

Vehicle & Equipment Storage

City of Rochester

Department of Public Works

Scale: 1/32"=1'-0"

Sheet 29

EXHIBIT C

Site Investigation

Rochester DPW Facility Study **August 11, 2014**
Site Selection Matrix

Site 1	45 Old Dover Road (Existing DPW Site)
Site 2	22 Phillips Lane
Site 3	58 Pickering Road
Site 4	442 Pickering Road
Site 5	163 Haven Hill Road
Site 6	162 Chestnut Hill Road

Criteria	Factors	Site 1 Score	Site 2 Score	Site 3 Score	Site 4 Score	Site 5 Score	Site 6 Score
1. Location (15 points)	Distance to Service Area	4	3	3	1	1	3
	(5 = less than 1 mile; 0 = more than 5 miles)						
	Appropriateness of Neighborhood	3	3	3	3	2	3
	(5 = Industrial or otherwise; 1 = Residential)						
	Site Access	5	2	4	2	3	3
	(5 = Good Access 1 = Poor Access)						
2. Physical Site Features (15 points)	Size of Site	0	10	10	10	5	10
	(10 = Greater than 15 acres; 0 = Less than 7 acres)						
	Shape of Site	4	3	4	3	2	4
	(5 = Favorable Shape; 0 = Restrictive Shape)						
3. Site History (15 points)	Favorability of Past Use	2	4	2	4	4	4
	(5 = Residential/Agricultural; 0 = Heavy Industrial						
	Favorability of Existing Use	2	4	4	4	4	4
	(5 = Residential/Agricultural; 0 = Heavy Industrial						
	Hazardous Materials Issues	3	3	0	4	4	4
	(5 = No Evidence; 0 = Known Contamination						
4. Zoning Consistency (15 points)	Consistency with Allowed Zoning Use	5	3	5	3	3	3
	(5 = Zoned Industrial; 1 = Zoned Residential)						
	Site Usability within Setbacks	4	4	5	5	2	3
	(5 = Not Restrictive 1 = Restrictive)						
	Site Usability Allowed Area Coverage	4	5	5	5	5	5
	(5 = Not Restrictive 1 = Restrictive)						
5. Environmental Impacts (15 points)	Presence of Receptors	4	2	4	2	3	2
	(5 = No Receptors 0 = Significant Receptors)						
	Endangered Wildlife Area	Unknown	Unknown	Unknown	Unknown	Unknown	Unknown
	(5 = No Impact 0 = Significant Impact)						
	Wetland	4	1	4	0	3	2
	(5 = No Wetlands 0 = Wetlands Onsite)						

Rochester DPW Facility Study **August 11, 2014**
Site Selection Matrix

Site 1	45 Old Dover Road (Existing DPW Site)
Site 2	22 Phillips Lane
Site 3	58 Pickering Road
Site 4	442 Pickering Road
Site 5	163 Haven Hill Road
Site 6	162 Chestnut Hill Road

Criteria	Factors	Site 1 Score	Site 2 Score	Site 3 Score	Site 4 Score	Site 5 Score	Site 6 Score
6. Access to utilities (15 points)	Availability of Sewer or Septic	3	2	3	0	0	0
	(3 = Public Sewer; 0 = No Sewer)						
	Availability of Electric Power	3	2	3	3	1	3
	(3 = 3-Phase Available; 0 = New Service Reqd)						
	Availability of Telecom	3	2	3	3	1	1
	(3 = Service Available 0 = New Service Reqd)						
	Availability of Water	3	2	3	0	1	1
	(3 = Public Water Available; 0 = New Well Reqd)						
	Availability of Gas Service	3	0	3	0	0	0
	(3 = Service Available 0 = New Service Reqd)						
7. Permitting (5 points)	Permit Requirements	4	2	3	2	2	2
	(5 = Bldg. Permit only 0 = Variance Reqd)						
8. Traffic Impacts (5 points)	Traffic Impacts	5	3	2	3	4	3
	(5 = No Impact 0 = Significant Impact)						
9. Cost of site development (15 points)	Cut and Fill Necessity	5	4	4	2	3	4
	(5 = Flat Site; 0 = Significant Slope)						
	Site Clearing	3	0	4	0	1	4
	(5 = Clear Site; 0 = Heavily Wooded Site)						
	Soils/Groundwater Suitability	3	0	3	2	2	2
	(5 = Good Soils/Low GW; 0 = Bad Soils/High GW						
10. Cost of construction (5 points)	General Site Restrictions Affecting Cost	2	4	2	3	3	3
	(5 = No Restrictions; 0 = Heavily Restricted)						
Total Raw Score (out of 120 total possible points)		81	68	86	64	59	73
Total Percentage Score		**68%**	**57%**	**72%**	**53%**	**49%**	**61%**

Rochester DPW Facility Study
Site Selection Matrix

August 11, 2014

Site 1	45 Old Dover Road (Existing DPW Site)
Site 2	22 Phillips Lane
Site 3	58 Pickering Road
Site 4	442 Pickering Road
Site 5	163 Haven Hill Road
Site 6	162 Chestnut Hill Road

Criteria	Site 1 45 Old Dover Road	Site 2 22 Phillips Lane	Site 3 58 Pickering Road	Site 4 442 Pickering Road	Site 5 163 Haven Hill Road	Site 6 162 Chestnut Hill Road
1. Location (15 points)	Score: 12 out of 15 Distance to center of city is good (1.5 mile) Neighborhood is partially residential Access to site is good because of length of street frontage	Score: 8 out of 15 Distance to center of city is moderate (2.3 miles) Neighborhood is mix of rural, residential and commercial Access to site is poor because of shape of site and poor road access	Score: 10 out of 15 Distance to center of city is moderate (2.3 miles) Neighborhood is mix of residential and industrial Access to site is moderate to good - See also 8. Traffic Impacts	Score: 6 out of 15 Distance to center of city is poor (4.7 miles) Neighborhood is mix of rural and residential Access to site is poor to moderate because of environmental impacts - See 5.	Score: 6 out of 15 Distance to center of city is poor (4.7 miles) Neighborhood is rural Access to site is moderate because of street frontage	Score: 9 out of 15 Distance to center of city is moderate (2.2 miles) Neighborhood is mix of residential and industrial Site has had previous truck traffic Access to site is moderate to good - See also 8. Traffic Impacts
2. Physical Site Features (15 points)	Score: 4 out of 15 Site is less than min recommended for new facility of 7 acres (5.3 acres) Shape of site is moderate to good for use as DPW site	Score: 13 out of 15 Site is 17.0 acres Shape of site is moderate for use as DPW site	Score: 14 out of 15 Site is 17.6 acres Shape of site is moderate to good for use as DPW site	Score: 13 out of 15 Site is 30.16 acres Shape of site is moderate for use as DPW site - Environmental impacts on site limit use	Score: 7 out of 15 Site is 15.0 acres Shape of site is moderate for use as DPW site - Environmental impacts on site limit use	Score: 14 out of 15 Site is 46 acres Shape of site is moderate to good for use as DPW site - Environmental impacts on site limit use- Well Prtotection Area
3. Site History (15 points)	Score: 7 out of 15 Past and current use as DPW site suggests possibility of contamination or other factors is high	Score: 11 out of 15 Past and current rural character suggests possibility of contamination or other factors is low	Score: 6 out of 15 Past and current use as industrial site suggests possibility of contamination or other factors is high	Score: 12 out of 15 Past and current rural/agricultural character suggests possibility of contamination or other factors is low	Score: 12 out of 15 Past and current rural/agricultural character suggests possibility of contamination or other factors is low	Score: 12 out of 15 Past and current rural/agricultural character suggests possibility of contamination or other factors is low
4. Zoning Consistency (15 points)	Score: 13 out of 15 Proposed use is consistent with zoning for site (Industrial III)	Score: 12 out of 15 Proposed use is somewhat inconsistent with zoning for site (Agricultural)	Score: 15 out of 15 Proposed use is consistent with zoning for site (Industrial II)	Score: 13 out of 15 Proposed use is somewhat inconsistent with zoning for site (Agricultural)	Score: 10 out of 15 Proposed use is somewhat inconsistent with zoning for site (Agricultural) Site size/shape	Score: 11 out of 15 Proposed use is somewhat inconsistent with zoning for site (Agricultural)
5. Environmental Impacts (15 points)	Score: 8 out of 10 No known significant environmental receptors	Score: 3 out of 10 Wetland area (wooded marsh) on site - Impact to be determined	Score: 8 out of 10 No known significant environmental receptors	Score: 2 out of 10 Wetland area (wooded marsh) and pond on site - Potential for significant impact	Score: 6 out of 10 Site adjacent to Somersworth well site - Impact to be determined	Score: 4 out of 10 Wetland area Cocheco River on site - Impact to be determined, Existing Well Site

Rochester DPW Facility Study
Site Selection Matrix

August 11, 2014

Site 1	45 Old Dover Road (Existing DPW Site)
Site 2	22 Phillips Lane
Site 3	58 Pickering Road
Site 4	442 Pickering Road
Site 5	163 Haven Hill Road
Site 6	162 Chestnut Hill Road

Criteria	Site 1 45 Old Dover Road	Site 2 22 Phillips Lane	Site 3 58 Pickering Road	Site 4 442 Pickering Road	Site 5 163 Haven Hill Road	Site 6 162 Chestnut Hill Road
6. Access to utilities (15 points)	Score: 15 out of 15 Utilities currently available at site (availability of gas service to be confirmed)	Score: 8 out of 15 Utilities currently available nearby, but some extension would be necessary to bring on site (availability of gas service to be confirmed)	Score: 15 out of 15 Utilities currently available nearby or immediately adjacent - some extension may be necessary to bring on site	Score: 6 out of 15 Power and Telephone available (need to confirm availability of 3-phase power) Does not appear to have sewer, water or gas service available	Score: 3 out of 15 Power and Telephone appear to be available but needs to be confirmed Does not appear to have sewer, water or gas service available	Score: 5 out of 15 Power and Telephone appear to be available but needs to be confirmed Does not appear to have sewer, water or gas service available
7. Permitting (5 points)	Score: 4 out of 5 Permitting appears to conventional given existing use of DPW - Needs to be confirmed	Score: 2 out of 5 Permitting may be difficult because of zoning and site environmental issues (wetlands)	Score: 3 out of 5 Permitting may have some complexities because of known contamination on site	Score: 2 out of 5 Permitting may be difficult because of zoning and site environmental issues (wetlands)	Score: 2 out of 5 Permitting may be difficult because of zoning and site environmental issues (adjacent to well site)	Score: 2 out of 5 Permitting may be difficult because of zoning and site environmental issues (wetlands & well site)
8. Traffic Impacts (5 points)	Score: 5 out of 5 Traffic impact low because there is no change in use	Score: 3 out of 5 Traffic impact moderate - access to main road can be at intersection	Score: 2 out of 5 Traffic impact on Pickering - Some mitigation may be necessary	Score: 3 out of 5 Some traffic impact on Pickering - Traffic is moderately light in area	Score: 4 out of 5 Some traffic impact on Haven Hill Road - Traffic is moderately light in area	Score: 3 out of 5 Some traffic impact on Chestnut Hill Road - Traffic is moderately light in area
9. Cost of site development (15 points)	Score: 13 out of 15 Flat site, but existing buildings will need to be demolished	Score: 4 out of 15 Site is relatively flat, but is heavily wooded. Site has possibly significant wet soils/high water table	Score: 15 out of 15 Site is relatively flat Site has some wooded areas that may need to be cleared Site has some wet areas, but is big enough to build away from	Score: 4 out of 15 Site appears to have some hilly area Site is heavily wooded Site has some wet areas/small pond - impacts large portion of the site	Score: 6 out of 15 Site is relatively flat Site is partially cleared Site may have high water table - adjacent to well site	Score: 10 out of 15 Site is relatively flat Site is partially cleared Site may have high water table - adjacent to well site
10. Cost of construction (5 points)	Score: 2 out of 5 Temporary facilities or phasing of project will be necessary	Score: 4 out of 5 Site has minimal restrictions that affect cost of building construction	Score:2 out of 5 Site has high water table - significant impact on building foundation	Score: 3 out of 5 Site may have high water table - may have some impact on building foundation	Score: 3 out of 5 Site may have high water table - may have some impact on building foundation	Score: 3 out of 5 Site may have high water table - may have some impact on building foundation

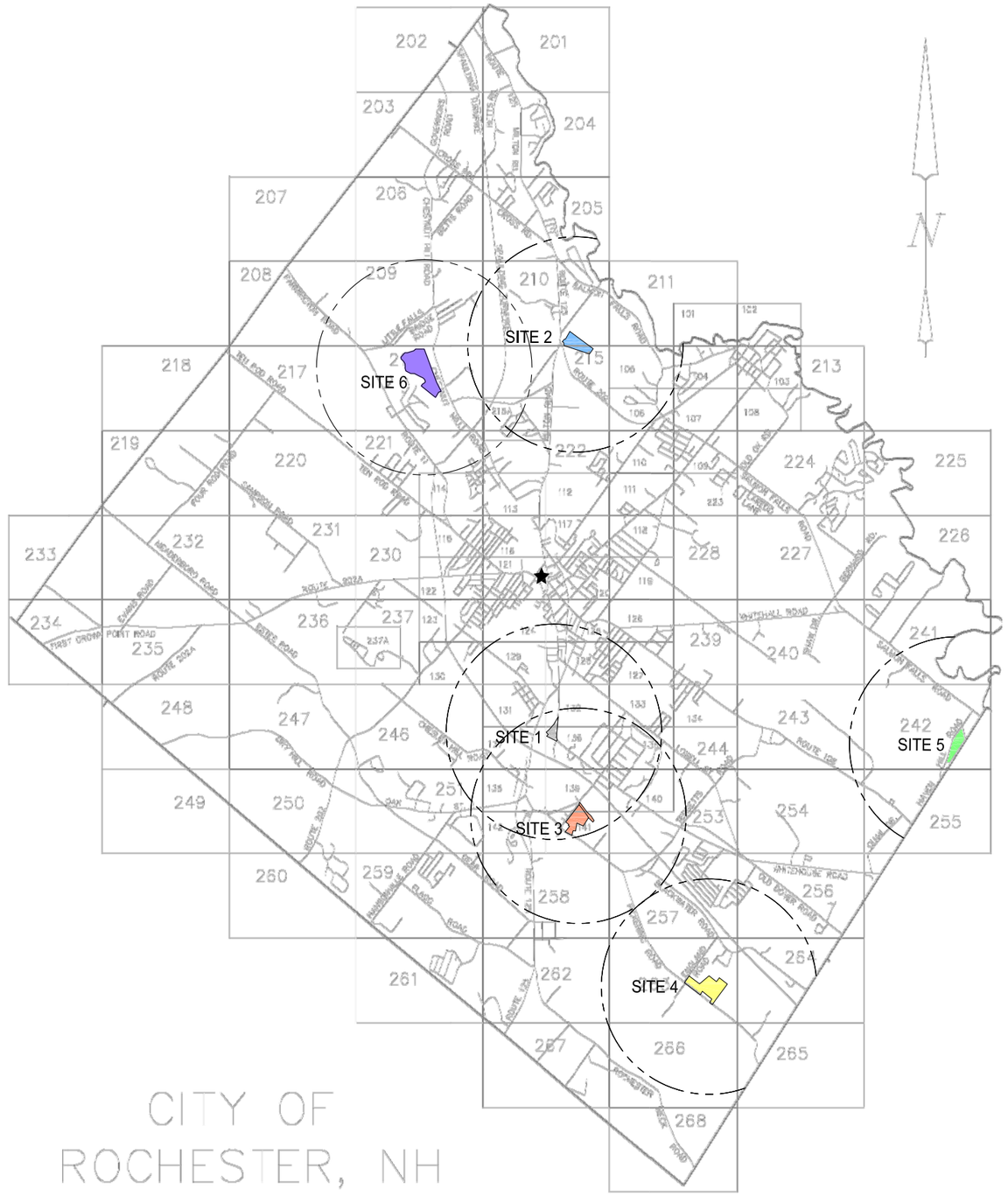

SITE 1
45 Old Dover Road
(Existing Facility)

SITE 2
22 Phillips Lane

SITE 3
58 Pickering Road

SITE 4
442 Pickering Road

SITE 5
183 Haven Hill Road

SITE 6
162 Chestnut Hill Road
(Detail plan not shown)

1 MILE RADIUS

CITY OF
ROCHESTER, NH
TAX MAPS INDEX

SCALE: 1"=6000'

Project:

CITY OF ROCHESTER
NEW DPW FACILITY

Weston & Sampson

100 International Drive
Portsmouth, NH
603-431-3937
www.westonandsampson.com

Consultants:

Revisions:

Rev	Date	Description

Seal:

Issued For:

SCHEMATIC DESIGN

Date: November 19, 2014

Scale: XXX

Drawn By: XXX

Reviewed By: XXX

Checked By: XXX

Approved By: XXX

Drawing Title:

SITE PLAN
OVERALL CITY MAP

Sheet Number:

L1.00

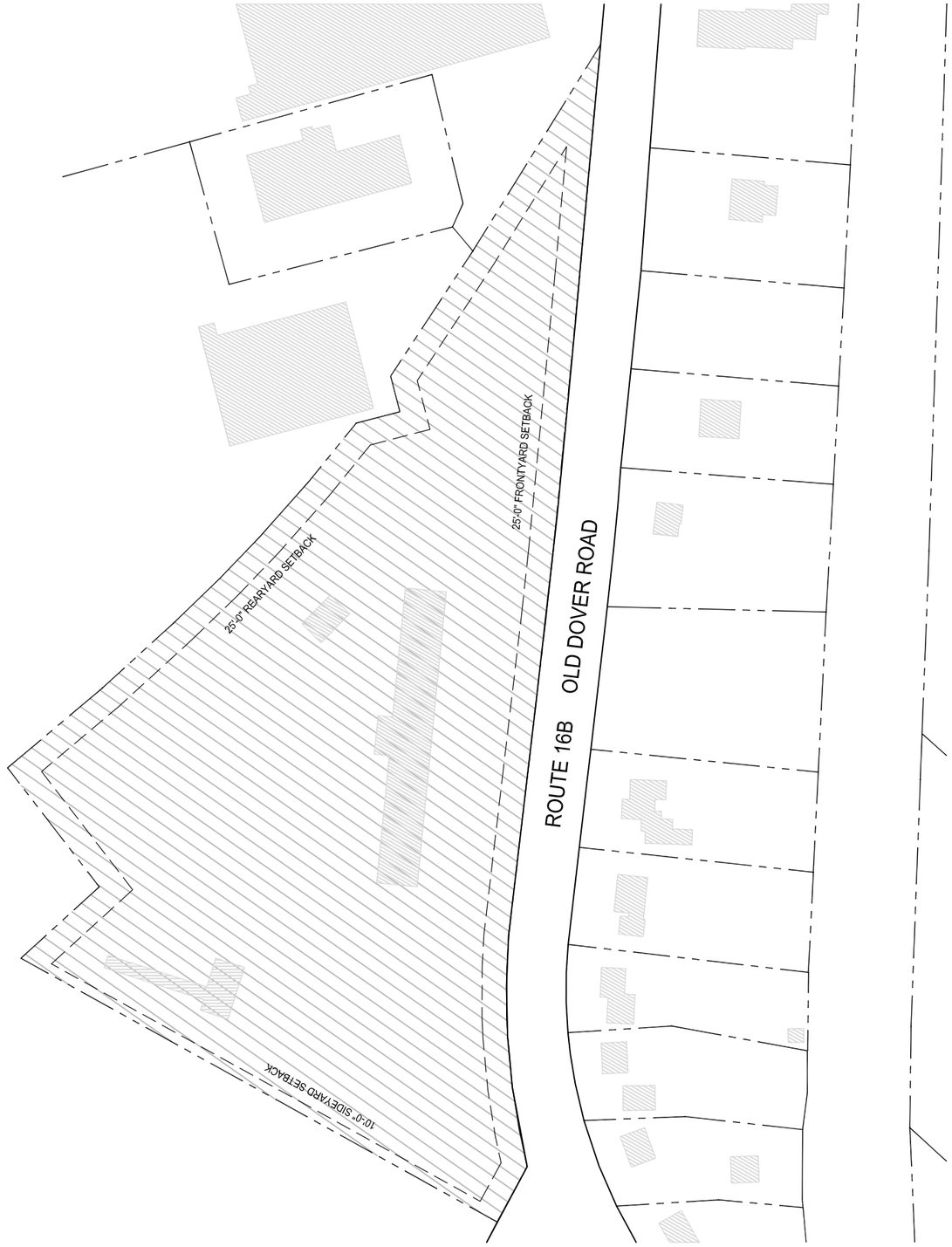

SITE 1:
45 Old Dover Road (Existing Facility)
Size: 5.3 Acres
Zoning: Industry III

Project:

CITY OF ROCHESTER
NEW DPW FACILITY

Weston & Sampson

100 International Drive
Portsmouth, NH
603-431-3937
www.westonandsampson.com

Consultants:

Revisions:

Rev	Date	Description

Seal:

Issued For:

SCHEMATIC DESIGN

Date: November 19, 2014
Scale: XXX
Drawn By: XXX
Reviewed By: XXX
Checked By: XXX
Approved By: XXX

Drawing Title:

SITE PLAN
SITE 1:
45 OLD DOVER ROAD

Sheet Number:

L1.01

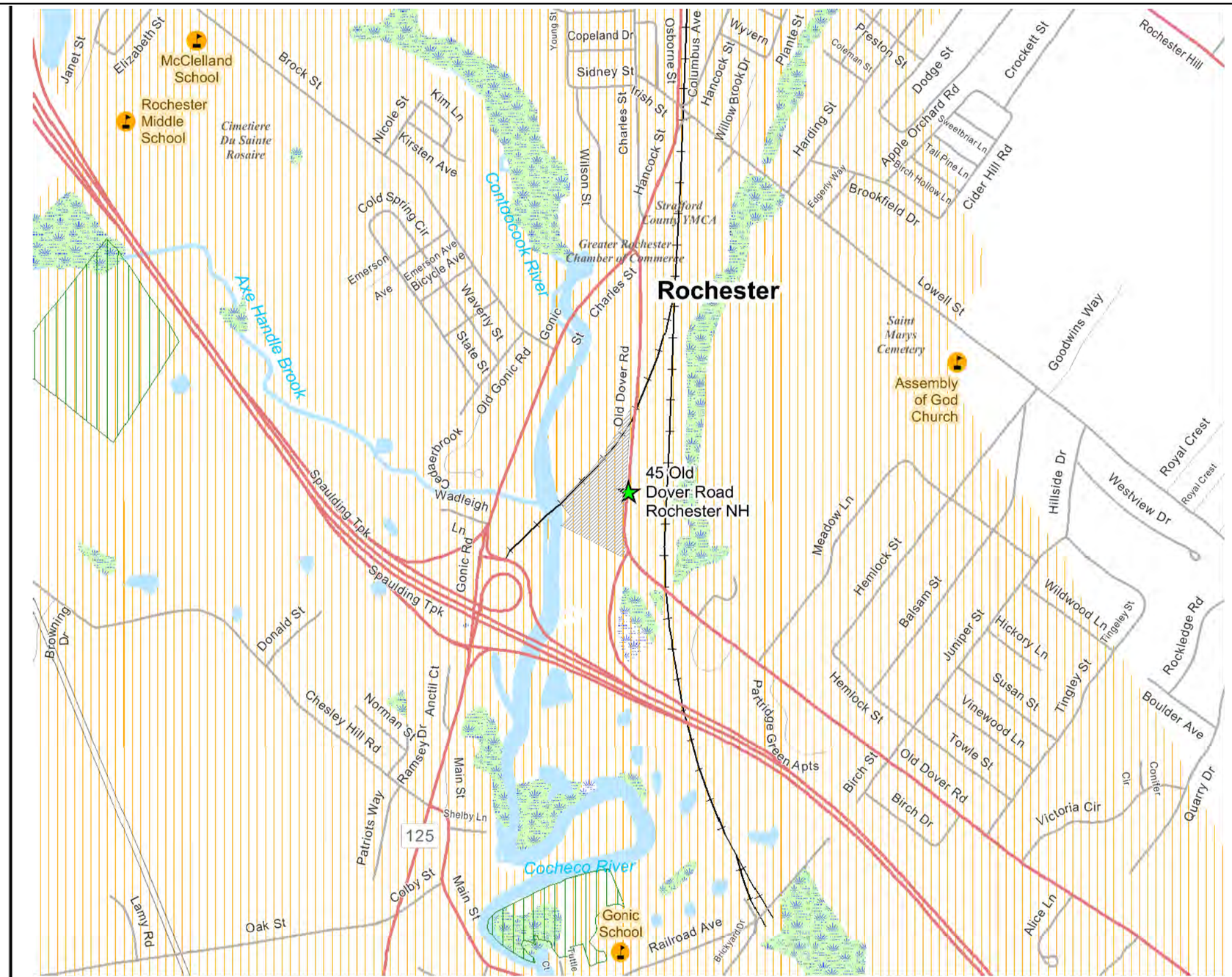

N
W E
S

1,200 600 0 1,200 Feet

0.25 0.125 0 0.25 Miles

Data Source:

- New Hampshire Geographically Referenced Analysis and Information Transfer System (NH GRANIT) is a cooperative project to create, maintain, and make available a statewide geographic data base serving the information needs of state, regional, and local decision-makers.

- New Hampshire Department of Environmental Services

Legend

- Potential DPW Sites
- School
- Airport; airport
- Hospital; hospital
- Civil
- Church
- USA Water Body Types
- Well

NH Dot Roads

Road Type

- Federal
- State
- Local
- Recreational, Private
- Town Boundaries
- Railroads
- Pipeline
- Conservation Land
- Marsh/Bog
- Wooded marsh
- Salt Marsh
- Open Water
- Tidal Flats
- Beach/Dune
- USA Named Streams and Rivers
- Aquifers

FIGURE 1
Area Receptors Map
DPW Site Study

45 Old Dover Road, Rochester NH

Weston&Sampson®

Project:

CITY OF ROCHESTER
NEW DPW FACILITY

Weston&Sampson
100 International Drive
Portsmouth, NH
603-431-3007
www.westonandsampson.com

Consultants:

Revisions:

Rev	Date	Description

Seal:

Issued For:
SCHEMATIC DESIGN

Date:	November 19, 2014
Scale:	XXX
Drawn By:	XXX
Reviewed By:	XXX
Checked By:	XXX
Approved By:	XXX

Drawing Title:
ENVIRONMENTAL RECEPTOR MAP
SITE 1:
45 OLD DOVER ROAD

Sheet Number:
L1.01A

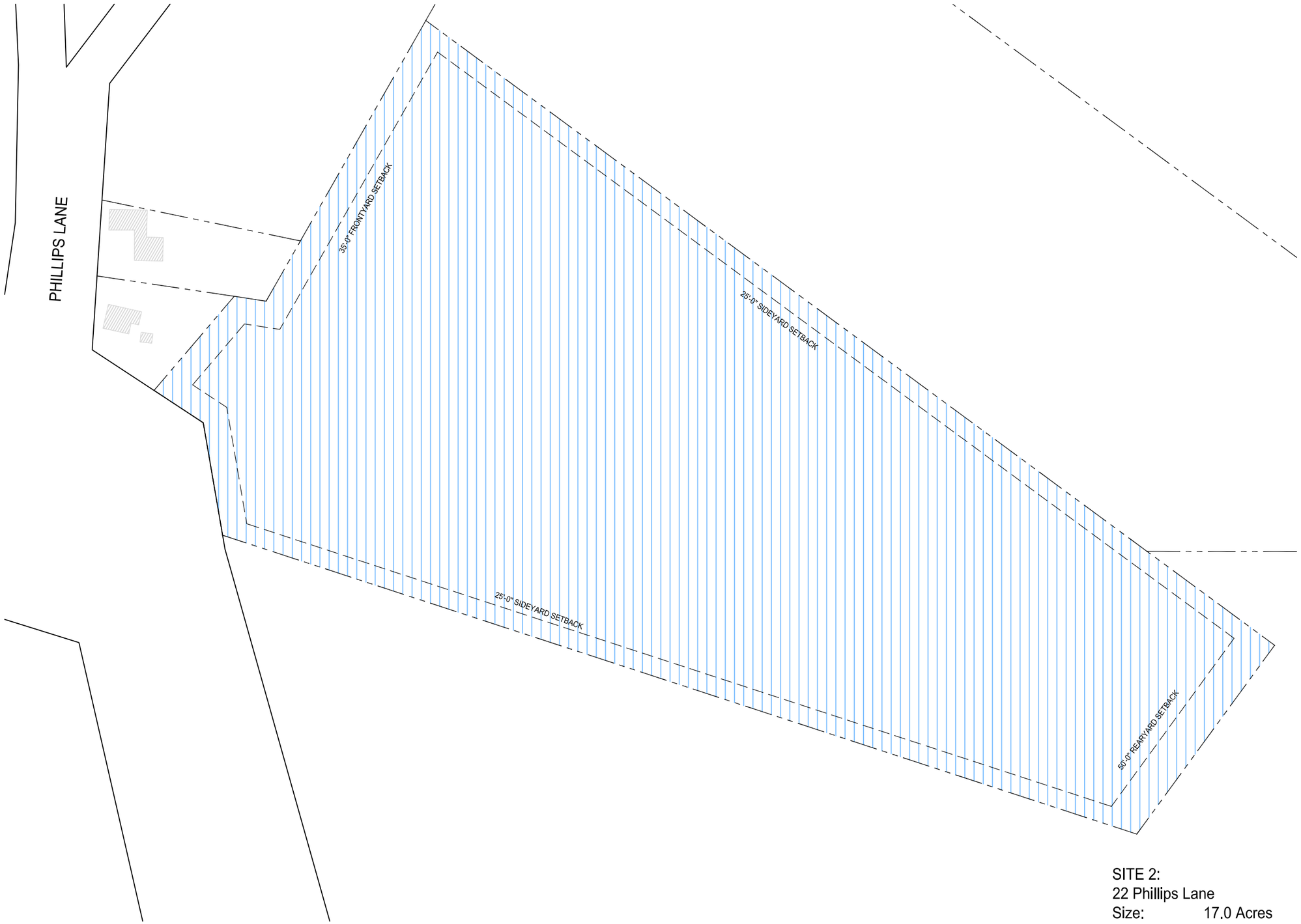

SITE 2:
22 Phillips Lane
Size: 17.0 Acres
Zoning: Agricultural

Project:

CITY OF ROCHESTER
NEW DPW FACILITY

Weston & Sampson

100 International Drive
Portsmouth, NH
603-431-3937
www.westonandsampson.com

Consultants:

Revisions:

Rev	Date	Description

Seal:

Issued For:

SCHEMATIC DESIGN

Date: November 19, 2014
Scale: XXX
Drawn By: XXX
Reviewed By: XXX
Checked By: XXX
Approved By: XXX

Drawing Title:

SITE PLAN
SITE 2:
22 PHILLIPS LANE

Sheet Number:

L1.02

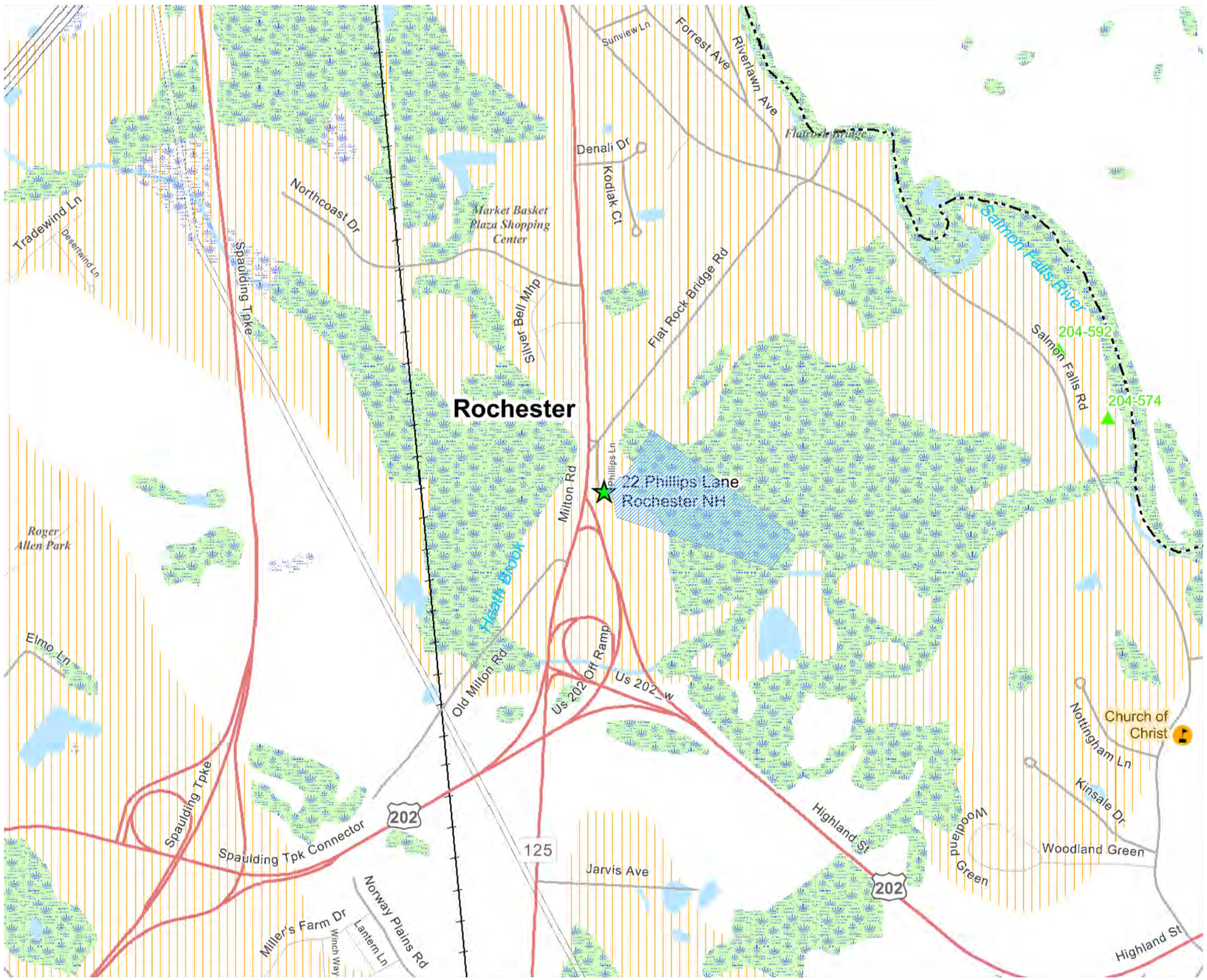

N
W E
S

1,200 600 0 1,200 Feet

0.25 0.125 0 0.25 Miles

Data Source:

- New Hampshire Geographically Referenced Analysis and Information Transfer System (NH GRANIT) is a cooperative project to create, maintain, and make available a statewide geographic data base serving the information needs of state, regional, and local decision-makers.

- New Hampshire Department of Environmental Services

Legend

- Potential DPW Sites
- School
- Airport; airport
- Hospital; hospital
- Civil
- Church
- USA Water Body Types
- Well

NH Dot Roads

Road Type

- Federal
- State
- Local
- Recreational, Private
- Town Boundaries
- Railroads
- Pipeline
- Conservation Land
- Marsh/Bog
- Wooded marsh
- Salt Marsh
- Open Water
- Tidal Flats
- Beach/Dune
- USA Named Streams and Rivers
- Aquifers

FIGURE 2
Area Receptors Map
DPW Site Study

22 Phillips Lane, Rochester NH

Weston&Sampson®

Project:

CITY OF ROCHESTER
NEW DPW FACILITY

Weston&Sampson
100 International Drive
Portsmouth, NH
603-431-3007
www.westonandsampson.com

Consultants:

Revisions:

Rev	Date	Description

Seal:

Issued For:

SCHEMATIC DESIGN

Date: November 19, 2014

Scale: XXX

Drawn By: XXX

Reviewed By: XXX

Checked By: XXX

Approved By: XXX

Drawing Title:

ENVIRONMENTAL RECEPTOR MAP
SITE 2:
22 PHILLIPS LANE

Sheet Number:

L1.02A

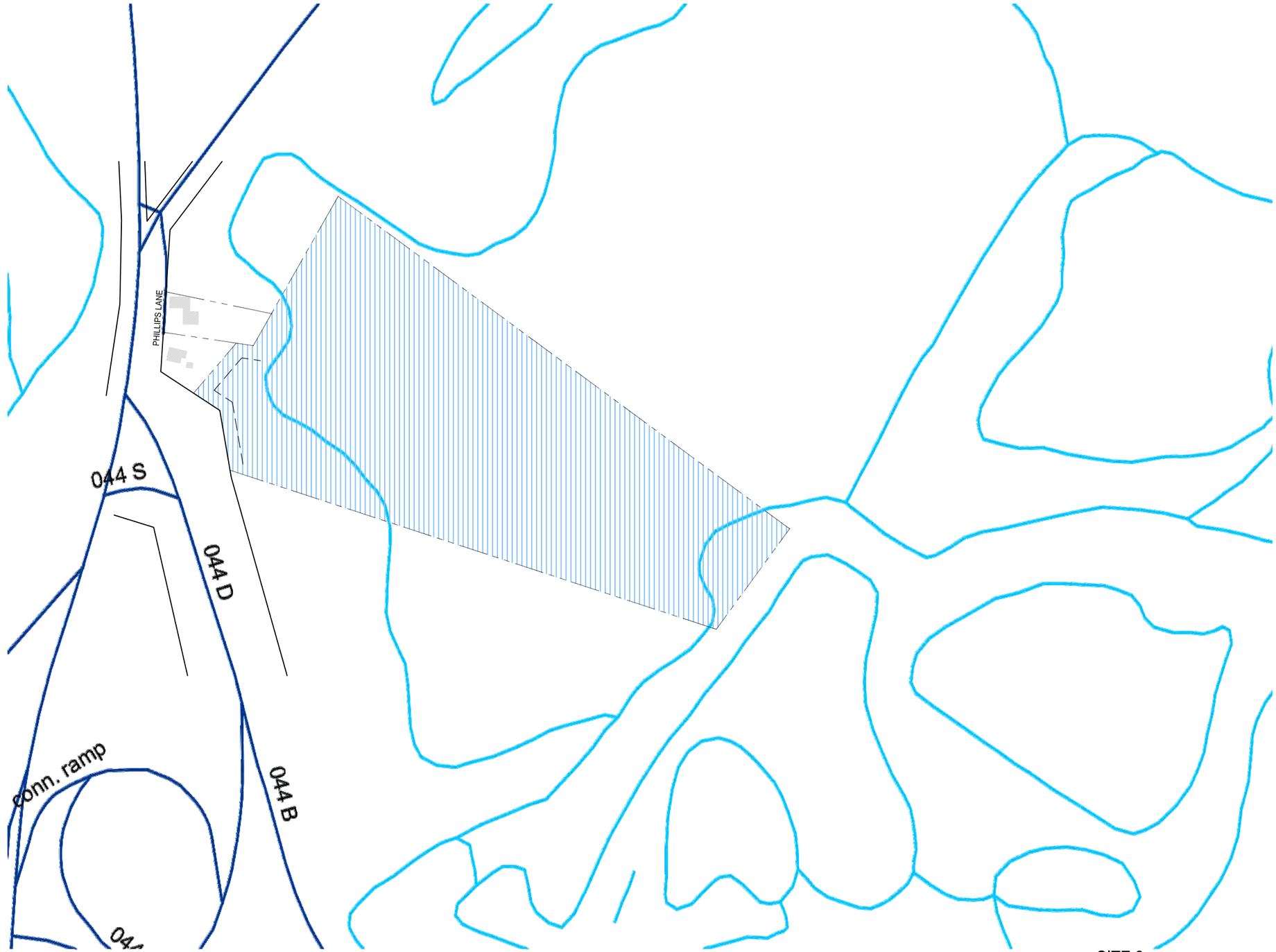

SITE 2:
22 Phillips Lane
Size: 17.0 Acres
Zoning: Agricultural

Project:

CITY OF ROCHESTER
NEW DPW FACILITY

Weston & Sampson
100 International Drive
Portsmouth, NH
603-431-3937
www.westonandsampson.com

Consultants:

Revisions:

Rev	Date	Description

Seal:

Issued For:
SCHEMATIC DESIGN

Date: November 19, 2014
Scale: XXX
Drawn By: XXX
Reviewed By: XXX
Checked By: XXX
Approved By: XXX

Drawing Title:
SITE PLAN
SITE 2B:
22 PHILLIPS LANE
WETLANDS MAP

Sheet Number:
L1.02B

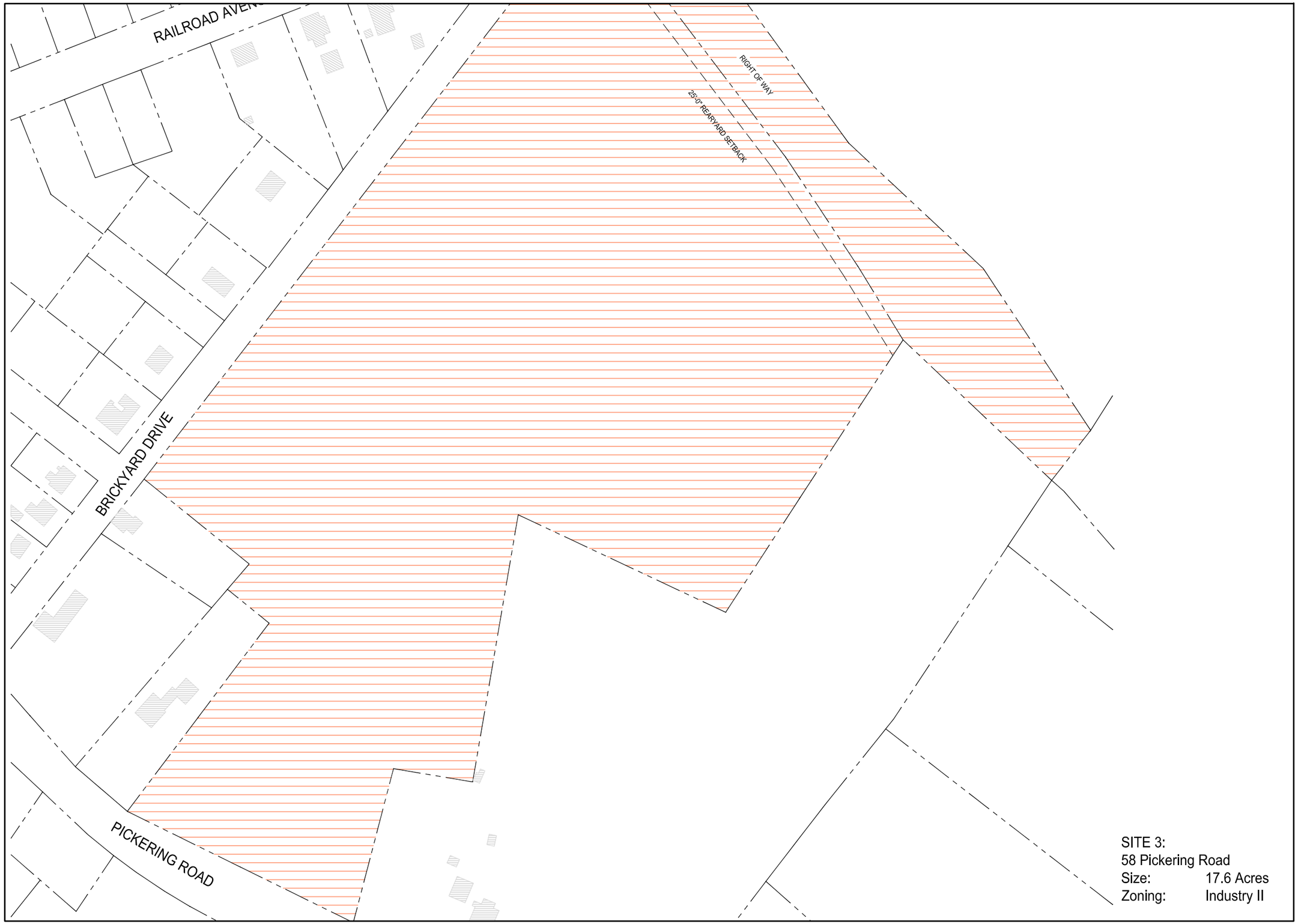

Project:

CITY OF ROCHESTER
NEW DPW FACILITY

Weston & Sampson.
100 International Drive
Portsmouth, NH
603-431-3937
www.westonandsampson.com

Consultants:

Revisions:

Rev	Date	Description

Seal:

Issued For:

SCHEMATIC DESIGN

Date:	November 19, 2014
Scale:	XXX
Drawn By:	XXX
Reviewed By:	XXX
Checked By:	XXX
Approved By:	XXX

Drawing Title:

SITE PLAN
SITE 3:
58 PICKERING ROAD

Sheet Number:

L1.03

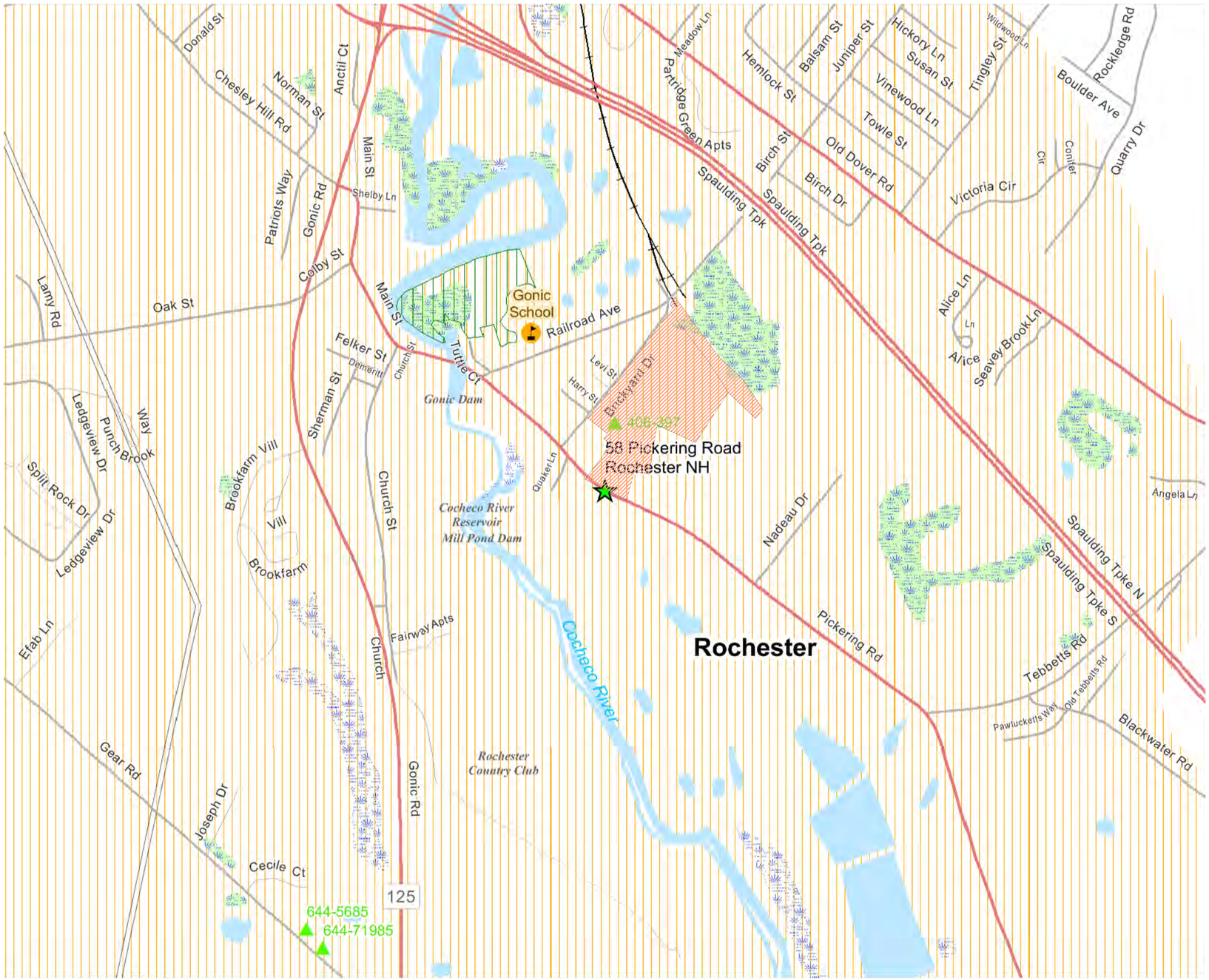

N
W E
S

1,200 600 0 1,200 Feet

0.25 0.125 0 0.25 Miles

Data Source:

- New Hampshire Geographically Referenced Analysis and Information Transfer System (NH GRANIT) is a cooperative project to create, maintain, and make available a statewide geographic data base serving the information needs of state, regional, and local decision-makers.

- New Hampshire Department of Environmental Services

Legend

- Potential DPW Sites
- School
- Airport; airport
- Hospital; hospital
- Civil
- Church
- USA Water Body Types
- Well

NH Dot Roads

Road Type

- Federal
- State
- Local
- Recreational, Private
- Town Boundaries
- Railroads
- Pipeline
- Conservation Land
- Marsh/Bog
- Wooded marsh
- Salt Marsh
- Open Water
- Tidal Flats
- Beach/Dune
- USA Named Streams and Rivers
- Aquifers

FIGURE 3

Area Receptors Map
DPW Site Study

58 Pickering Road, Rochester NH

Weston&Sampson®

Project:

CITY OF ROCHESTER
NEW DPW FACILITY

Weston&Sampson

100 International Drive
Portsmouth, NH
603-431-3307
www.westonandsampson.com

Consultants:

Revisions:

Rev	Date	Description

Seal:

Issued For:

SCHEMATIC DESIGN

Date: November 19, 2014

Scale: XXX

Drawn By: XXX

Reviewed By: XXX

Checked By: XXX

Approved By: XXX

Drawing Title:

ENVIRONMENTAL RECEPTOR MAP
SITE 3:
58 PICKERING ROAD

Sheet Number:

L1.03A

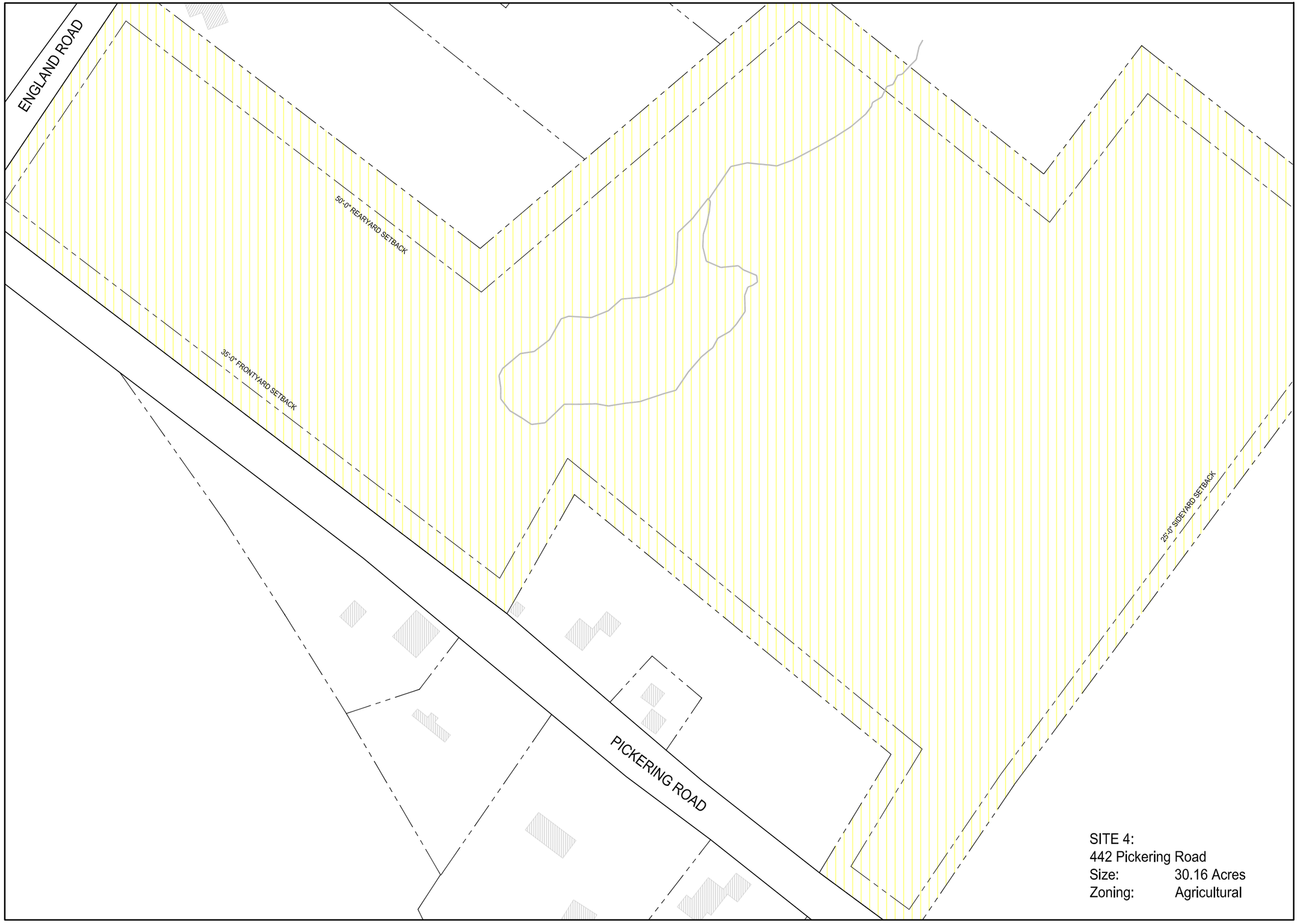

Project:

CITY OF ROCHESTER
NEW DPW FACILITY

Weston & Sampson.

100 International Drive
Portsmouth, NH
603-431-3937
www.westonandsampson.com

Consultants:

Revisions:

Rev	Date	Description

Seal:

Issued For:

SCHEMATIC DESIGN

Date:	November 19, 2014
Scale:	XXX
Drawn By:	XXX
Reviewed By:	XXX
Checked By:	XXX
Approved By:	XXX

Drawing Title:

SITE PLAN
SITE 4:
442 PICKERING ROAD

Sheet Number:

L1.04

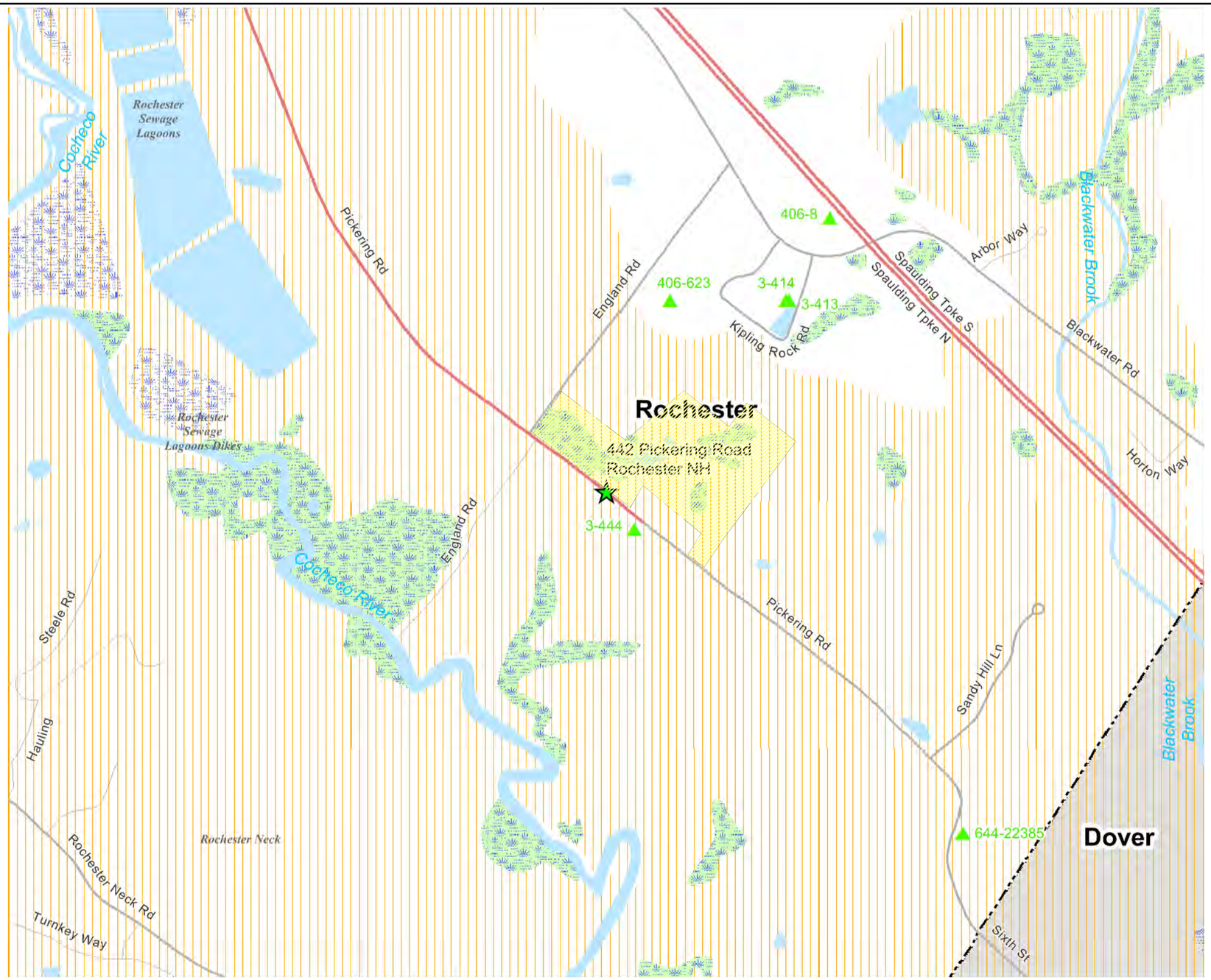

N
W E
S

1,200 600 0 1,200 Feet

0.25 0.125 0 0.25 Miles

Data Source:

- New Hampshire Geographically Referenced Analysis and Information Transfer System (NH GRANIT) is a cooperative project to create, maintain, and make available a statewide geographic data base serving the information needs of state, regional, and local decision-makers.

- New Hampshire Department of Environmental Services

Legend

- Potential DPW Sites
- School
- Airport; airport
- Hospital; hospital
- Civil
- Church
- USA Water Body Types
- Well

NH Dot Roads

Road Type

- Federal
- State
- Local
- Recreational, Private
- Town Boundaries
- Railroads
- Pipeline
- Conservation Land
- Marsh/Bog
- Wooded marsh
- Salt Marsh
- Open Water
- Tidal Flats
- Beach/Dune
- USA Named Streams and Rivers
- Aquifers

FIGURE 4
Area Receptors Map
DPW Site Study

442 Pickering Road, Rochester NH

Weston&Sampson®

Project:

CITY OF ROCHESTER
NEW DPW FACILITY

Weston&Sampson.

100 International Drive
Portsmouth, NH
603-431-3007
www.westonandsampson.com

Consultants:

Revisions:

Rev	Date	Description

Seal:

Issued For:
SCHEMATIC DESIGN

Date: November 19, 2014
Scale: XXX
Drawn By: XXX
Reviewed By: XXX
Checked By: XXX
Approved By: XXX

Drawing Title:
ENVIRONMENTAL RECEPTOR MAP
SITE 4:
442 PICKERING ROAD

Sheet Number:
L1.04A

SITE 5:
163 HAven Hill Raod
Size: 15.0Acres
Zoning: Agricultural

Project:

CITY OF ROCHESTER
NEW DPW FACILITY

Weston & Sampson

100 International Drive
Portsmouth, NH
603-431-3937
www.westonandsampson.com

Consultants:

Revisions:

Rev	Date	Description

Seal:

Issued For:
SCHEMATIC DESIGN

Date: November 19, 2014
Scale: XXX
Drawn By: XXX
Reviewed By: XXX
Checked By: XXX
Approved By: XXX

Drawing Title:

SITE PLAN
SITE 5:
HAVEN HILL ROAD

Sheet Number:

L1.05

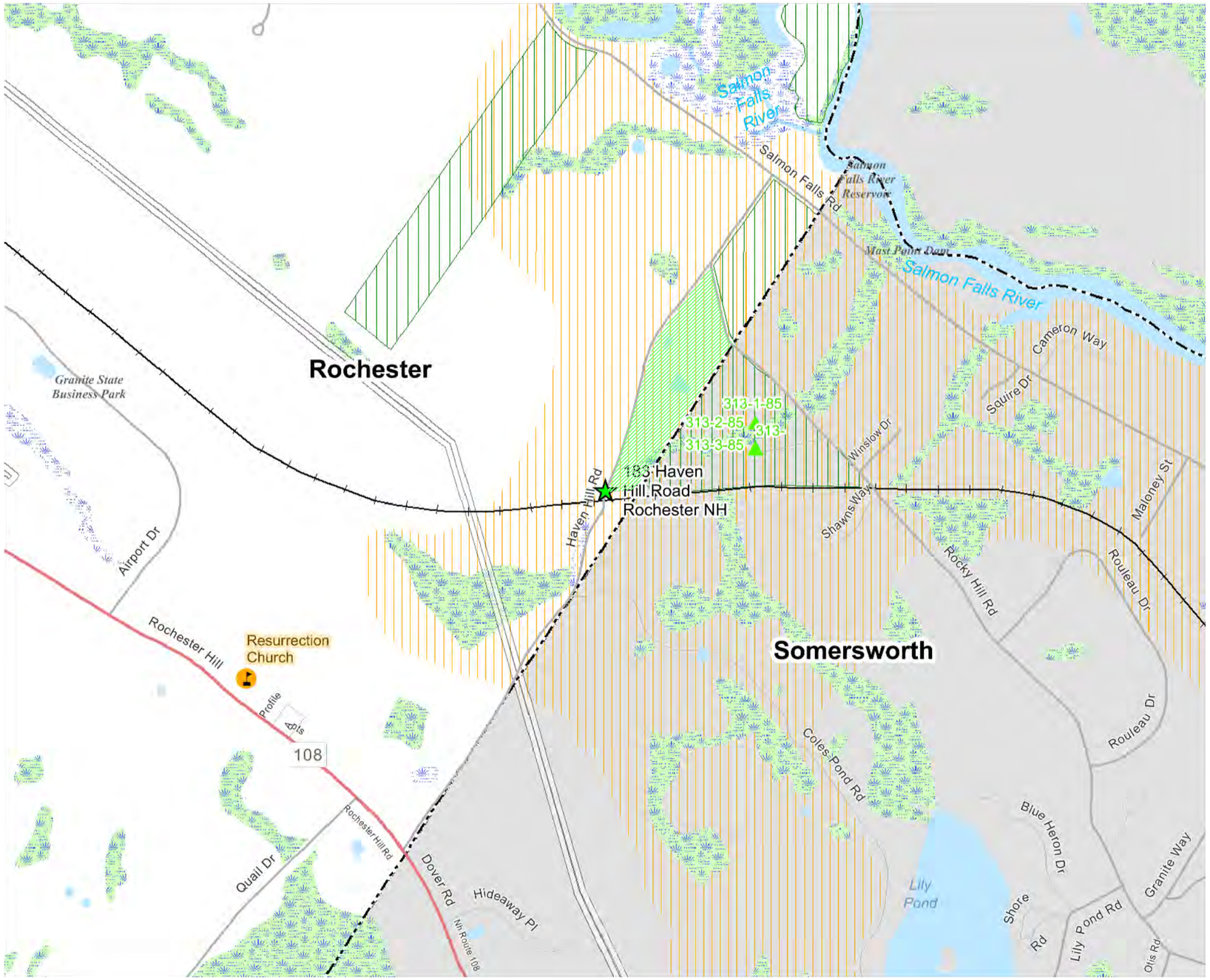

N
W E
S

1,200 600 0 1,200 Feet

0.25 0.125 0 0.25 Miles

Data Source:

- New Hampshire Geographically Referenced Analysis and Information Transfer System (NH GRANIT) is a cooperative project to create, maintain, and make available a statewide geographic data base serving the information needs of state, regional, and local decision-makers.

- New Hampshire Department of Environmental Services

Legend

- Potential DPW Sites
- School
- Airport; airport
- Hospital; hospital
- Civil
- Church
- USA Water Body Types
- Well

NH Dot Roads

Road Type

- Federal
- State
- Local
- Recreational, Private
- Town Boundaries
- Railroads
- Pipeline
- Conservation Land
- Marsh/Bog
- Wooded marsh
- Salt Marsh
- Open Water
- Tidal Flats
- Beach/Dune
- USA Named Streams and Rivers
- Aquifers

FIGURE 5
Area Receptors Map
DPW Site Study

183 Haven Hill Road, Rochester NH

Weston&Sampson®

Project:

CITY OF ROCHESTER
NEW DPW FACILITY

Weston&Sampson.

100 International Drive
Portsmouth, NH
603-431-3007
www.westonandsampson.com

Consultants:

Revisions:

Rev	Date	Description

Seal:

Issued For:

SCHEMATIC DESIGN

Date:	November 19, 2014
Scale:	XXX
Drawn By:	XXX
Reviewed By:	XXX
Checked By:	XXX
Approved By:	XXX

Drawing Title:

ENVIRONMENTAL RECEPTOR MAP
SITE 5:
HAVEN HILL ROAD

Sheet Number:

L1.05A

EXHIBIT D

Site and Building Planning

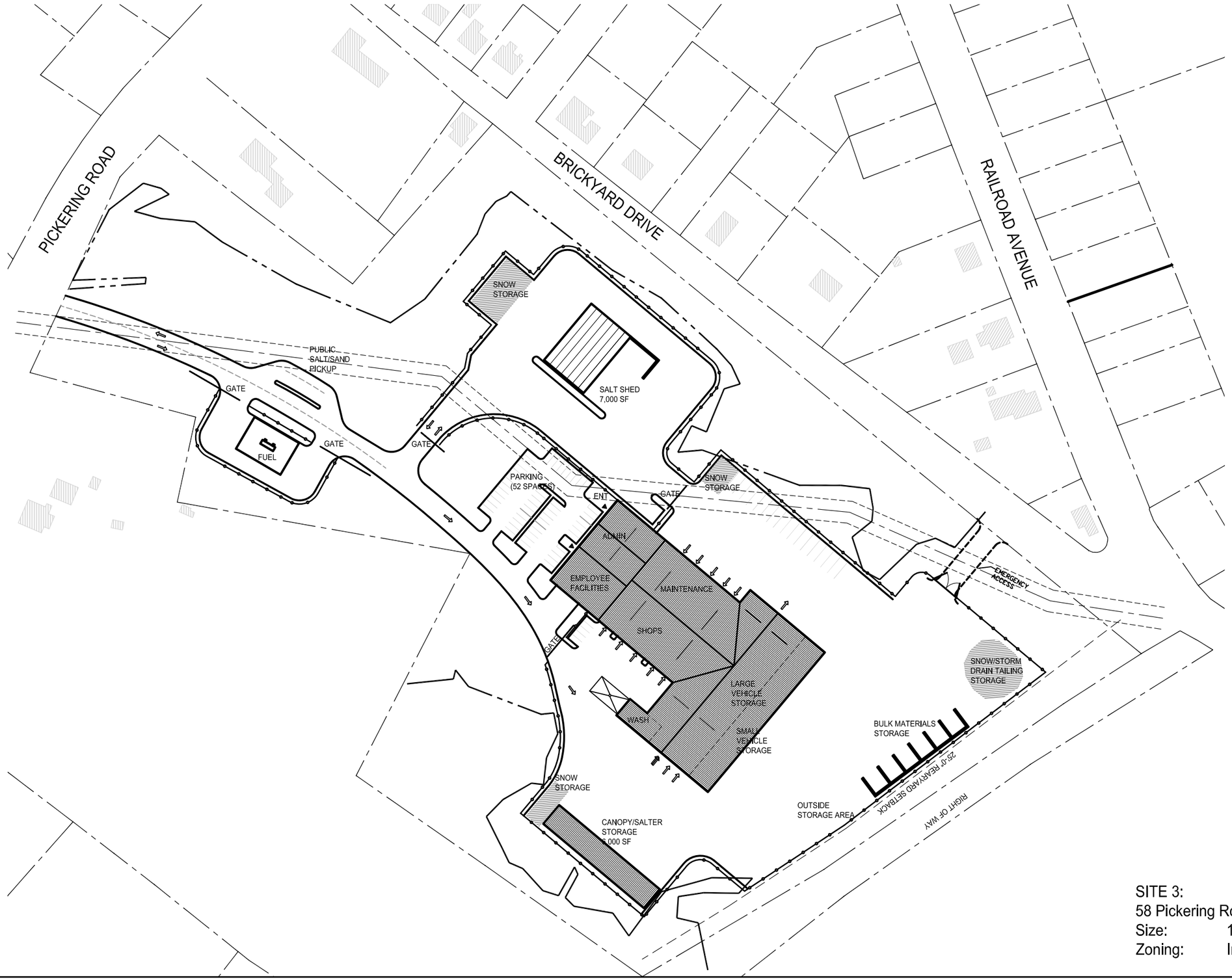

SITE 3:
58 Pickering Road
Size: 17.6 Acres
Zoning: Industry II

Project:

CITY OF ROCHESTER
NEW DPW FACILITY

Weston & Sampson

100 International Drive
Portsmouth, NH
603-431-3937
www.westonandsampson.com

Consultants:

Revisions:

Rev	Date	Description

Seal:

Issued For:

SCHEMATIC DESIGN

Date: November 19, 2014
Scale: 1" = 60' - 0"
Drawn By: JW
Reviewed By: JP
Checked By: JP
Approved By: JP

Drawing Title:

SITE PLAN
58 PICKERING ROAD

Sheet Number:

L1.00

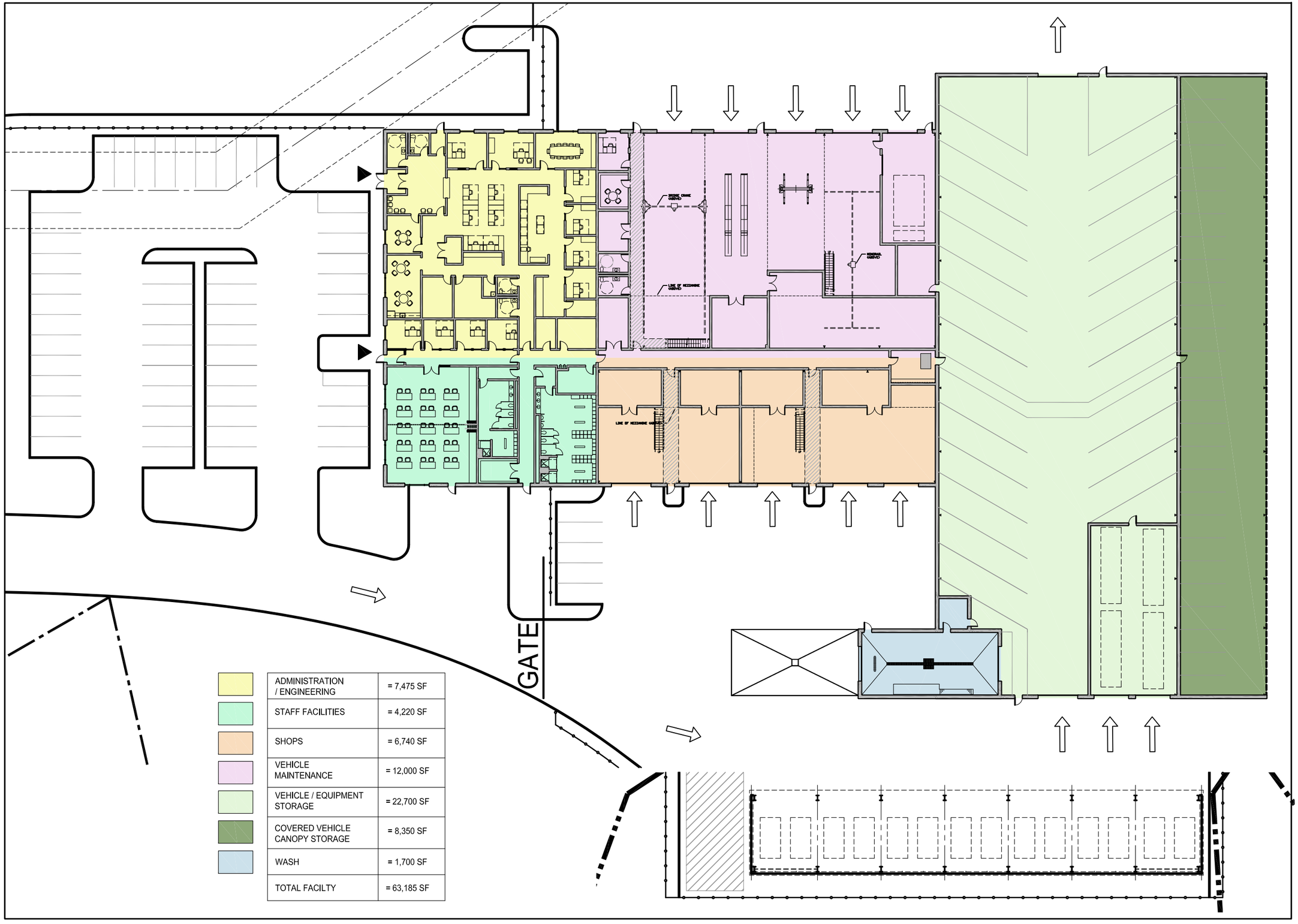

	ADMINISTRATION / ENGINEERING	= 7,475 SF
	STAFF FACILITIES	= 4,220 SF
	SHOPS	= 6,740 SF
	VEHICLE MAINTENANCE	= 12,000 SF
	VEHICLE / EQUIPMENT STORAGE	= 22,700 SF
	COVERED VEHICLE CANOPY STORAGE	= 8,350 SF
	WASH	= 1,700 SF
	TOTAL FACILTY	= 63,185 SF

Project:

CITY OF ROCHESTER
NEW DPW FACILITY

Weston & Sampson
100 International Drive
Portsmouth, NH
603-431-3937
www.westonandsampson.com

Consultants:

Revisions:

Rev	Date	Description

Seal:

Issued For:

SCHEMATIC DESIGN

Date: November 19, 2014

Scale: 1/16" = 1' - 0"

Drawn By: JW

Reviewed By: JP

Checked By: JP

Approved By: JP

Drawing Title:

FLOOR PLAN
58 PICKERING ROAD

Sheet Number:

A1.01

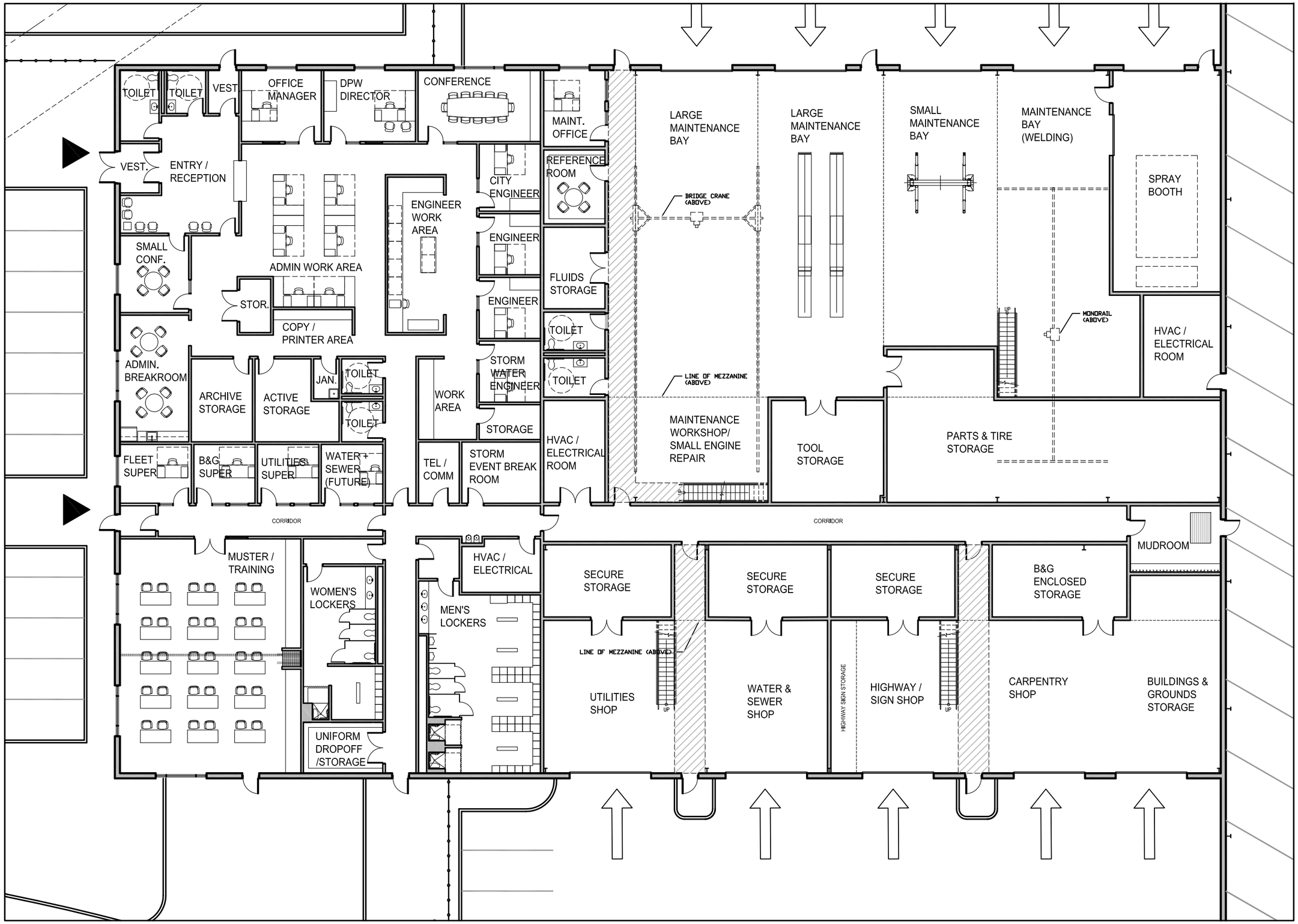

Project:

CITY OF ROCHESTER
NEW DPW FACILITY

Weston & Sampson

100 International Drive
Portsmouth, NH
603-431-3937
www.westonandsampson.com

Consultants:

Revisions:

Rev	Date	Description

Seal:

Issued For:

SCHEMATIC DESIGN

Date: November 19, 2014

Scale: 1/8" = 1' - 0"

Drawn By: JW

Reviewed By: JP

Checked By: JP

Approved By: JP

Drawing Title:

ENLARGED PARTIAL FLOOR PLAN: ADMINISTRATION
58 PICKERING ROAD

Sheet Number:

A1.02

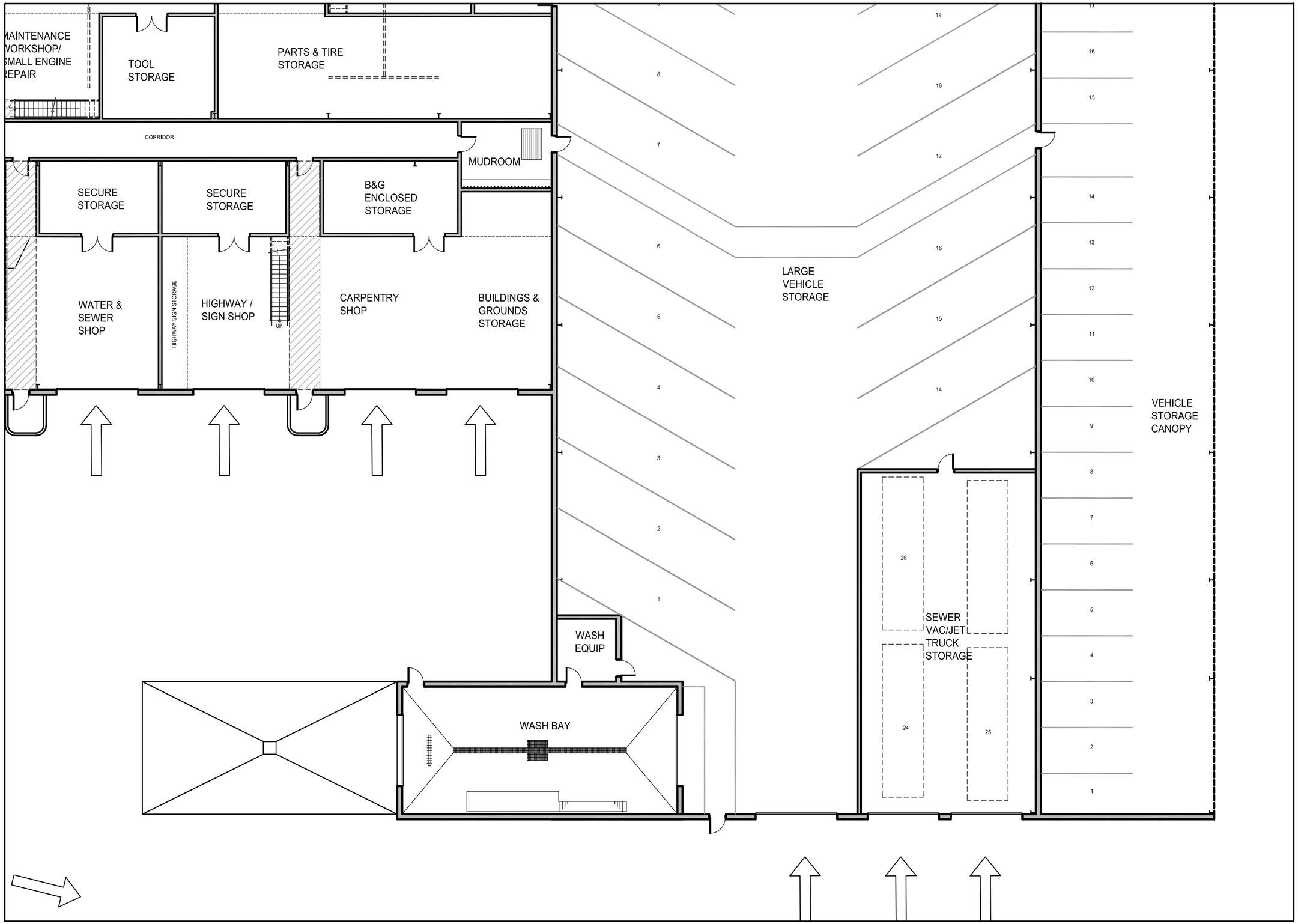

Project:

CITY OF ROCHESTER
NEW DPW FACILITY

Weston & Sampson

100 International Drive
Portsmouth, NH
603-431-3937
www.westonandsampson.com

Consultants:

Revisions:

Rev	Date	Description

Seal:

Issued For:

SCHEMATIC DESIGN

Date: November 19, 2014

Scale: 1/8" = 1' - 0"

Drawn By: JW

Reviewed By: JP

Checked By: JP

Approved By: JP

Drawing Title:

ENLARGED PARTIAL FLOOR PLAN: VEHICLE STORAGE
58 PICKERING ROAD

Sheet Number:

A1.03

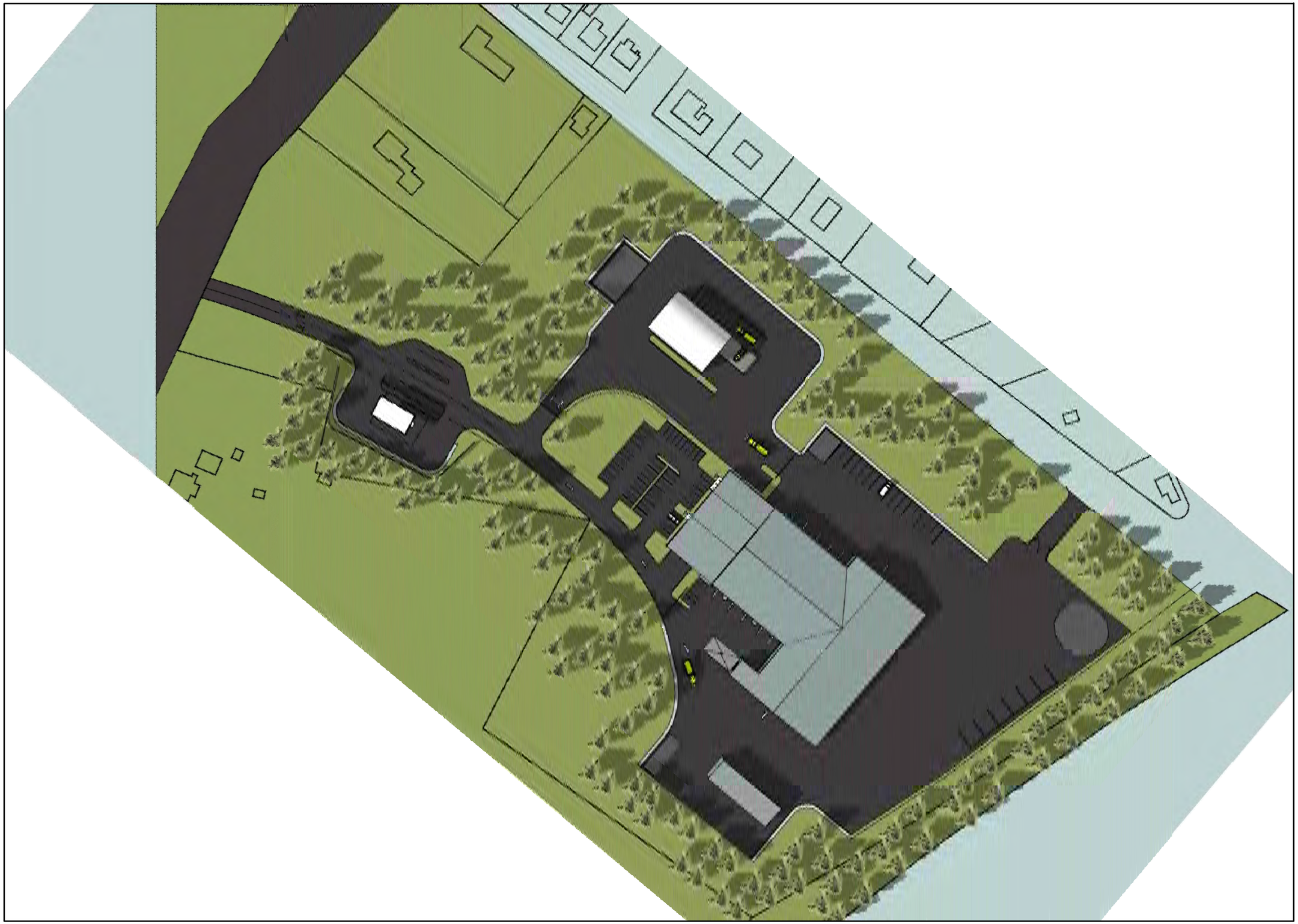

Project:

CITY OF ROCHESTER
NEW DPW FACILITY

Weston&Sampson.

100 International Drive
Portsmouth, NH
603-431-3007
www.westonandsampson.com

Consultants:

Revisions:

Rev	Date	Description

Seal:

Issued For:

SCHEMATIC DESIGN

Date: November 19, 2014

Scale: N.T.S.

Drawn By: JW

Reviewed By: JP

Checked By: JP

Approved By: JP

Drawing Title:

MODEL VIEW 1
58 PICKERING ROAD

Sheet Number:

A2.01

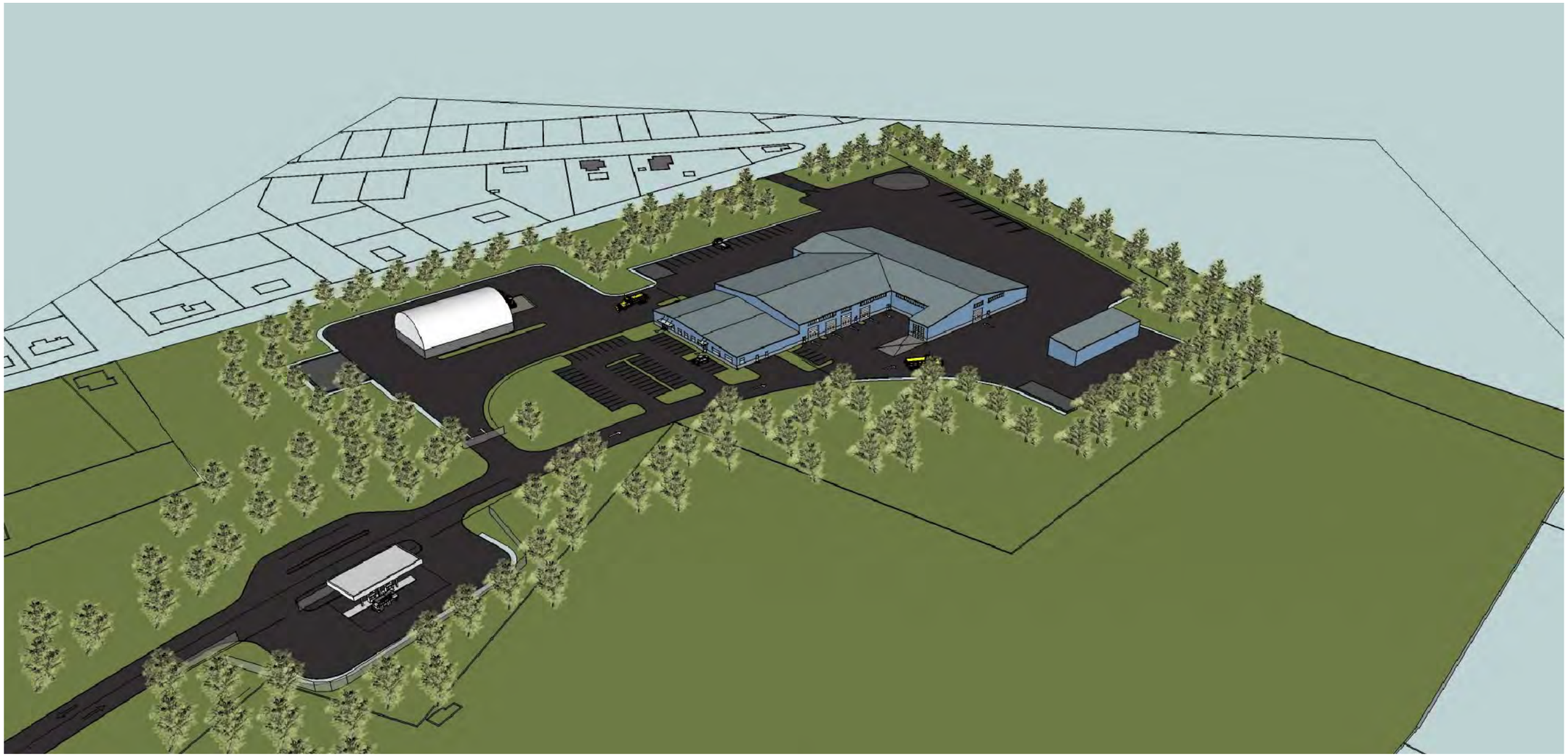

Project:

CITY OF ROCHESTER
NEW DPW FACILITY

Weston & Sampson

100 International Drive
Portsmouth, NH
603-431-3937
www.westonandsampson.com

Consultants:

Revisions:

Rev	Date	Description

Seal:

Issued For:

SCHEMATIC DESIGN

Date: November 19, 2014

Scale: N.T.S.

Drawn By: JW

Reviewed By: JP

Checked By: JP

Approved By: JP

Drawing Title:

MODEL VIEW 2
58 PICKERING ROAD

Sheet Number:

A2.02

Project:

CITY OF ROCHESTER
NEW DPW FACILITY

Weston & Sampson

100 International Drive
Portsmouth, NH
603-431-3937
www.westonandsampson.com

Consultants:

Revisions:

Rev	Date	Description

Seal:

Issued For:

SCHEMATIC DESIGN

Date: November 19, 2014

Scale: N.T.S.

Drawn By: JW

Reviewed By: JP

Checked By: JP

Approved By: JP

Drawing Title:

MODEL VIEW 3
58 PICKERING ROAD

Sheet Number:

A2.03

Project:

CITY OF ROCHESTER
NEW DPW FACILITY

Weston & Sampson

100 International Drive
Portsmouth, NH
603-431-3937
www.westonandsampson.com

Consultants:

Revisions:

Rev	Date	Description

Seal:

Issued For:

SCHEMATIC DESIGN

Date: November 19, 2014

Scale: N.T.S.

Drawn By: JW

Reviewed By: JP

Checked By: JP

Approved By: JP

Drawing Title:

MODEL VIEW 4
58 PICKERING ROAD

Sheet Number:

A2.04

EXHIBIT E

Fleet Management and Maintenance Report

City of Rochester, NH
Department of Public Works

Fleet Management and Maintenance Report

January 20, 2015

Weston & Sampson Engineers, Inc.
100 International Drive, Suite 152
Portsmouth, NH 03801
tel: 603-431-3937 fax: 603-433-4358
www.westonandsampson.com
Innovative Solutions since 1899

Staffing

Objective

Improper mechanic staffing is detrimental to the cost effective delivery of services. If staffing levels are too high, operating costs will be high. If staffing levels are too low, mechanics will fall behind on scheduled services, while breakdowns increase at a dramatic rate. This results in more expensive breakdowns and higher operating costs for the organization. It also promotes more downtime of the fleet and poor customer relations. As downtime increases, more parts are required, user departments demand more equipment, and the fleet starts to grow out of control in numbers. We refer to this as "fleet creep".

Typically we will assign the fleet operation a fixed number of Vehicle Equivalents (VE) for which they will be responsible. This serves to identify staffing levels estimated to be appropriate for the size of the fleet in question. After nearly sixty consulting engagements geographically and demographically across the United States, Weston & Sampson has established a range for selecting the recommended number of VE l. We estimate the high side, 100 VE per mechanic, as the foundation for the best in class and make certain staffing recommendations toward the lower end based off that count.

Dozens of issues that are often specific are used in the process of identifying the recommended staffing ratio for the fleet in question.

Each of the following elements was used in the process of developing the recommended VE ratio(s) for the City. While there is no set formula for raising and lowering the ratio, decisions for developing the recommended VE ratio are made by the consultant assigned to the engagement based on experience and the elements listed below.

Element of Consideration	Ratio Raised for Positive	Ratio Lowered for Negatives
The amount of outsourcing done	High level of outsourced work	Many labor-intensive tasks performed in-house
The facilities in which the mechanics work	Very adequate facilities, supportive of the work performed	Inadequate facilities
The weather conditions	Moderate, temperate, little or no snow and ice	Cold, rain, snow and/or ice present
The type of vehicle considered “front line”	Most of the fleet vehicles are relatively uncomplicated	Complex systems, multiple axles, highly specialized
The availability of spare parts within the municipality	Many parts sources, parts often delivered same day	Travel to other communities to obtain parts is often required
The type of procurement policies that are in place [vehicles and equipment]	Procurement of best-in-class models; procurement of vehicles that match the workload; attention to standardization; training is included; focus on warranties is strong	Procurement of lowest bidder; procurement of vehicles that inadequately match the workload; no attention to standardization; training is not included; warranty programs are not included/followed

Element of Consideration	Ratio Raised for Positive	Ratio Lowered for Negatives
The type of procurement policies that are in place [parts]	Parts procurement decisions are made based on quality of parts and/or dealer recommendations	Aftermarket parts used; fabricated parts used; rebuilt parts used
The location of the fleet vis-à-vis the maintenance facility	Co-located, staged at or adjacent to the fleet maintenance facility	Distance from the fleet maintenance facility
The type of mileage put on the vehicles	Road access available, used predominantly, miles are easy on the vehicles	Stop and go traffic, spurts of acceleration followed by brake application, idling time
Driving conditions	Paved streets, freeways, few traffic signals and stop signs	Potholes, jammed traffic, unusually long idling periods, off road, mud, ice, snow
Maintenance procedures—level of maintenance performed	Major component swap outs	Major component overhauls
The age of the fleet—replacement plans	Younger fleet based on strong and well-supported replacement plan	Aging fleet; older vehicles; procurement slippages prevail

Element of Consideration	Ratio Raised for Positive	Ratio Lowered for Negatives
Operator procedures—maintenance contributions made by the operators	Strong focus on first level maintenance, daily checks, maintenance reporting	Operators get in and go without routine daily checks
Focus on Preventive Maintenance	Strong focus on Preventive Maintenance (PM)	Abundance of corrective maintenance
Type of information system in use	Robust fleet management information system	Manual, partial, or non-dedicated fleet management information system
Quality assurance procedures	Strong commitment to QA	Little or no QA available
Staging Options	Warm [indoor] storage	Cold [outdoor] storage
Customer surveys	Strong feedback system in place	Little or no feedback available
Self-evaluation	Strong self-evaluation system in place	Little or no self-evaluation
Training programs	Strong focus on training mechanics	Inadequate training program

Many other elements can exist that will have an impact on the VE estimate. The ones shown above are just a few representative examples. These examples, however, help describe the process.

For the elements shown above, the VE ratio can be raised if there are certain positive operational characteristics and can be lowered if certain negative

operational characteristics exist. As such, establishing a VE total for the fleet is an exercise in statistical analysis—a mathematical process.

For example, a standard sedan is 1.0 vehicle equivalent and the typical two-ton truck rates 2.5 vehicle equivalents. This means that it takes about two and one-half times the labor effort to maintain a two-ton truck as it does to maintain a sedan. A backhoe is typically 6.0 VE's, which means it takes approximately six times as much effort to maintain a backhoe as it does a sedan.

Recommendation

The current Vehicle Equivalent calculation has determined that there are approximately 119 pieces of equipment such as trucks, cars, and air compressors to front-end loaders. Within this count there are multiple attachments such as plows, spreaders and mowers, all totaling 259 VE.

Given the need to correct many current operational conditions that we mentioned above, we feel there's sufficient staffing to cover the daily maintenance and repairs with VE staffing closer to 70 to 1 ratio. This staffing may seem lean, given the significant problems with the current operation such as the aged fleet, antiquated fleet repair shop, and less than adequate information technology, but a new state-of-the-art shop will improve productivity. The installation of adequate fleet management information should also provide more time for the Lead mechanic to focus on vehicle repair activity.

Fleet Replacement Planning

Objective

Many fleet professionals and government decision makers confuse fleet replacement planning with procedures used to select which vehicles should actually be replaced. The former is a strategic activity designed to predict replacement funding needs. Fleet assets can be replaced in a planned and rational manner before undesirable operating impacts occur, such as high repair costs and disruptions in service delivery activities caused by vehicle breakdowns. The latter is a tactical activity, with the goal to spend allocated funds in the most beneficial manner by selecting the vehicles that "deserve" replacement.

Finding

The City of Rochester developed a vehicle replacement plan, but of the 111 units listed on the inventory sheet, 26 units have not been assigned a replacement year or a purchase price of the asset listed. We have also determined that 28 assets have

exceeded the assigned life expediency. Some well over the projected replacement date. The asset list provided with the total purchase price of $3,783,828 does not have a new purchase price assigned for over 50 of those assets. As in many municipalities, budget constraints have caused the decision makers to defer vehicle and equipment replacement to fund what others believe are more important needs. Unfortunately the fleet is then made as the sacrificial cow through these deferred replacements. When these deferrals take place, operating costs begin to escalate at an alarming rate while service levels fall sharply. What results is a phenomenon called "Fleet Creep". What follows is the process of this "Fleet Creep":

- Assets are deferred;
- Warranties expire;
- Fleet age grows;
- Fleet is less reliable due to age;
- Parts costs escalate;
- When a few new units are purchased, users are reluctant to give up old;
- Parts become harder to get due to fleet age;
- More maintenance space is required;
- Fleet Down Time increases (units waiting on parts);
- Users again keep more old units;
- Fleet growth in numbers increases (Fleet Creep);
- Mechanics can't keep up with demand;
- Overall morale declines, as
- Service levels drop.

Unfortunately, this is the scenario the City will face should deferrals continue to escalate.

Recommendation

Manage the vehicle replacement in a more proactive manner. All assets, when purchased, should be entered immediately on the replacement plan to include the purchase price and the year of anticipated replacement. The main thrust of this recommendation is to not allow the deferral of assets, but adhere to a structured vehicle replacement planning procedure established. In most fleet operations, 10% of the replacement value of a proactive fleet is set aside annually to fund the program. Based on the purchase price provided by the City ($3,783,828), we calculated a straight line depreciation exercise and found the current value of the assets listed to be $2,475,132. At 10% of the purchase price, we would expect to see $378,383 annually for assets listed. We also took a snapshot of the

replacement purchases made over the past 9 years and found that on average, the City spent $275,015 or $103,368 short of an annual target. Keep in mind that some 50 units (almost half), have no value listed, so the replacement fund in our opinion is extremely under funded. As cost data on the fleet becomes easier to collect and more valid, expand on the replacement planning process by adjusting the two major components: (1) replacement planning parameters that determine when each vehicle and piece of equipment should be replaced; and (2) a financing and funding process to ensure money is available to purchase a replacement when the replacement date is reached. This is best managed through an internal service fund approach. A clear distinction needs to be drawn between the (strategic) replacement planning and funding process and the (tactical) process for selecting specific units to be replaced. Replacement cycles are planning parameters, and as such, are predictive criteria used to establish funding requirements. While they are also often used to identify potential candidates for replacement, additional factors need to be considered when developing the list of units – in priority order – that need replacement. These additional factors include maintenance and repair costs, reliability, type of use, and vehicle condition.

The fine tuning of the systematic vehicle replacement program will provide the City with more stable and predictable operating costs, a safer fleet, increased user satisfaction, improved vehicle reliability, a potential reduction in fleet size, and increased accountability for total fleet related costs. It also keeps the political process out of fleet replacement.

The primary objective of a formal replacement plan is to project aggregate, long-term fleet replacement costs to ensure that sufficient funds are recovered to defray these costs. Securing adequate funds to ensure the timely replacement of vehicles and equipment will continue to be the biggest challenge facing fleet management organizations in these economic and challenging times.

EXHIBIT F

Community Comparison Data and Charts

Community	City (C) Town (T)	Size (Sq Miles)	Population	Density (1000 Res/Sq Mi)	Miles of Road	Road Density (miles of road per sq mile)	Division Count (Future)	DPW Staff Count	Highway Staff Count	DPW Vehicle Count	DPW Facility SF	Age of Facility
Claremont	C	44.1	13,051	0.30	126	2.86	5	33	10	80	13,700	65 yrs
Dover	C	29.0	30,510	1.05	154	5.31	8	65	10	50	53,000	15 yrs
Exeter	T	19.8	14,306	0.72	66.5	3.36	4	38	12	45	29,600	45 yrs
Keene	C	37.6	23,419	0.62	126	3.35	8	69	22	125	76,000	12 yrs
Laconia	C	26.6	16,010	0.60	100	3.76	3	27	6	44	43,000	52 yrs
Lebanon	C	41.4	13,599	0.33	100	2.42	6	48	8	87	34,500	41 yrs
Londonderry	T	41.9	23,236	0.55	180	4.30	3	16	16	31	14,000	41 yrs
Merrimack	T	33.4	25,119	0.75	160	4.79	6	55	26	50	23,000	42 yrs
Portsmouth	C	16.8	21,440	1.28	136	8.10	4	189	58	143	30,150	16 yrs
Rochester	*C*	*45.8*	*29,745*	*0.65*	*180*	3.93	*4*	*57*	*10*	*59*	*14,500*	63 yrs
Salem	T	25.9	28,112	1.09	210	8.11	2	34	20	96	20,000	36 yrs
Average		32.93	21686.09	0.72	139.86	4.57	4.82	57.36	18.00	73.64	31950.00	36 yrs
Rochester % above or below Average		39%	37%	-10%	29%	-14%	-17%	-1%	-44%	-20%	-55%	77%

Community	Highway Staff per 1,000 Residents	Facility SF per Staff	Road Miles per Staff Member	Vehicles per 10 Road Miles	Ratio Income to Budget	Highway Staff per Road Mile	Facility SF per Road Mile	Road Density (Miles Rd to Sq Mi)	Age of Facility
Claremont	2.53	1370.00	3.82	6.35	0.007	0.08	108.73	2.86	65 yrs
Dover	2.13	5300.00	2.37	3.25	0.010	0.06	344.16	5.31	15 yrs
Exeter	2.66	2466.67	1.75	6.77	0.004	0.18	445.11	3.36	45 yrs
Keene	2.95	3454.55	1.83	9.92	0.003	0.17	603.17	3.35	12 yrs
Laconia	1.69	7166.67	3.70	4.40	0.006	0.06	430.00	3.76	52 yrs
Lebanon	3.53	4312.50	2.08	8.70	0.006	0.08	345.00	2.42	41 yrs
Londonderry	0.69	875.00	11.25	1.72	0.028	0.09	77.78	4.30	41 yrs
Merrimack	2.19	884.62	2.91	3.13	0.009	0.16	143.75	4.79	42 yrs
Portsmouth	8.82	519.83	0.72	10.51	0.003	0.43	221.69	8.10	16 yrs
Rochester	1.92	1450.00	3.16	3.28	0.002	0.06	80.56	3.93	63 yrs
Salem	1.21	1000.00	6.18	4.57	0.008	0.10	95.24	8.11	36 yrs
Average	2.75	2618.17	3.61	5.69	0.01	0.13	263.20	4.57	39 yrs
Rochester % above or below Average	-30%	-45%	-13%	-42%	-75%	-58%	-69%	-14%	62%

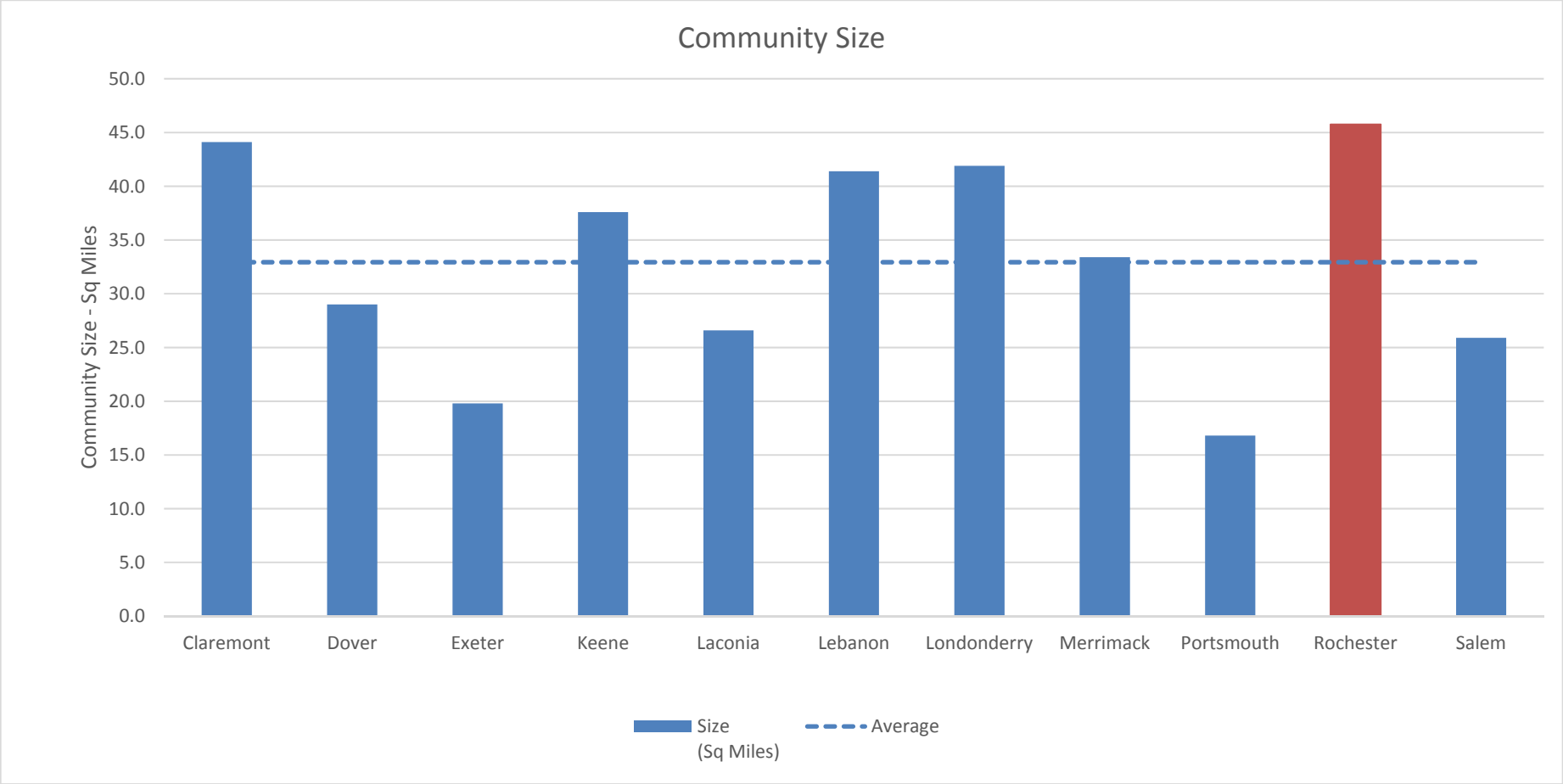
Community Size
Community Size - Sq Miles
50.0
45.0
40.0
35.0
30.0
25.0
20.0
15.0
10.0
5.0
0.0
Claremont
Dover
Exeter
Keene
Laconia
Lebanon
Londonderry
Merrimack
Portsmouth
Rochester
Salem
Size (Sq Miles)
Average

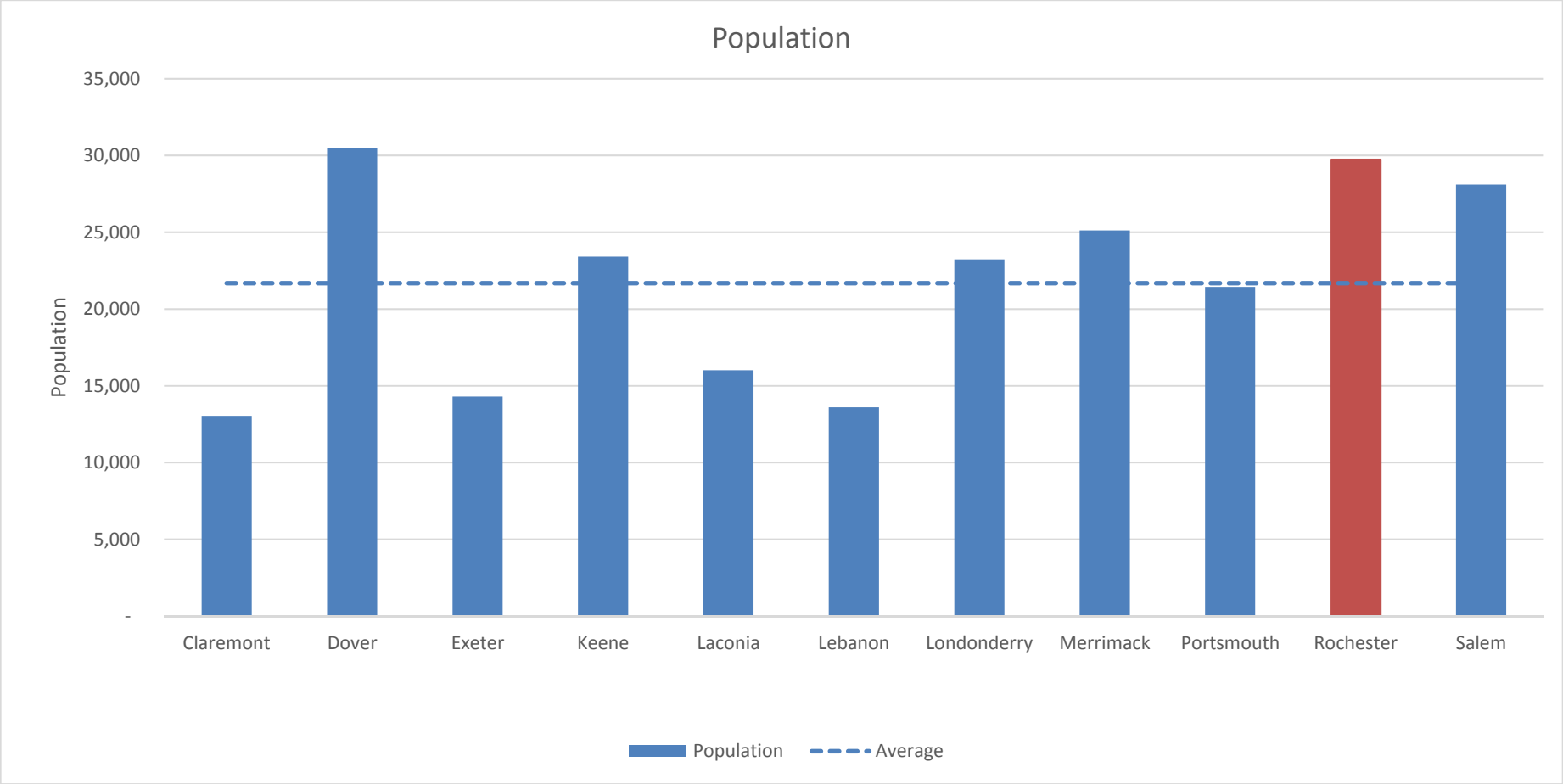
Population
35,000
30,000
25,000
20,000
15,000
10,000
5,000
-
Population
Claremont
Dover
Exeter
Keene
Laconia
Lebanon
Londonderry
Merrimack
Portsmouth
Rochester
Salem
Population
Average

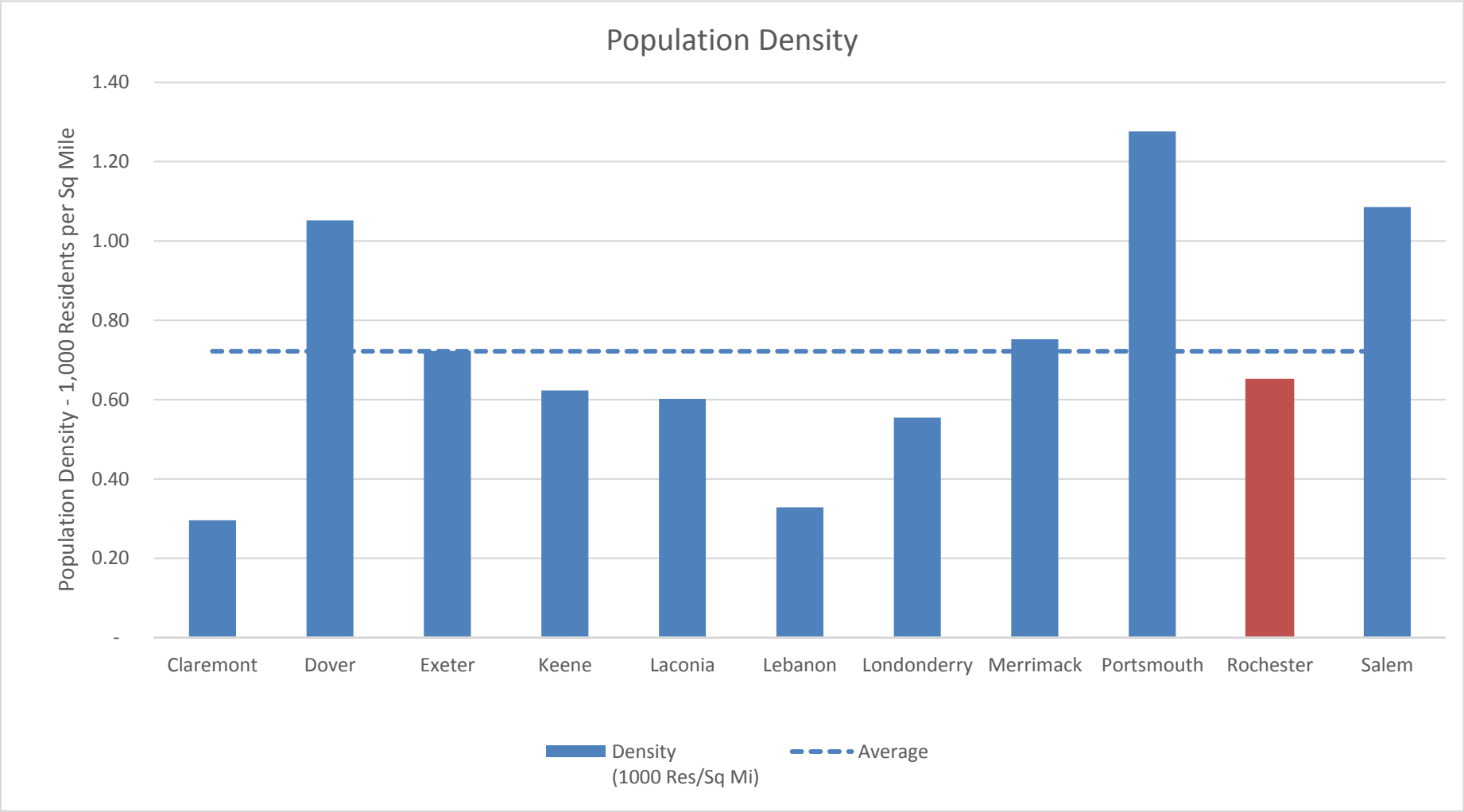
Population Density
Population Density - 1,000 Residents per Sq Mile
1.40
1.20
1.00
0.80
0.60
0.40
0.20
-
Claremont
Dover
Exeter
Keene
Laconia
Lebanon
Londonderry
Merrimack
Portsmouth
Rochester
Salem
Density (1000 Res/Sq Mi)
Average

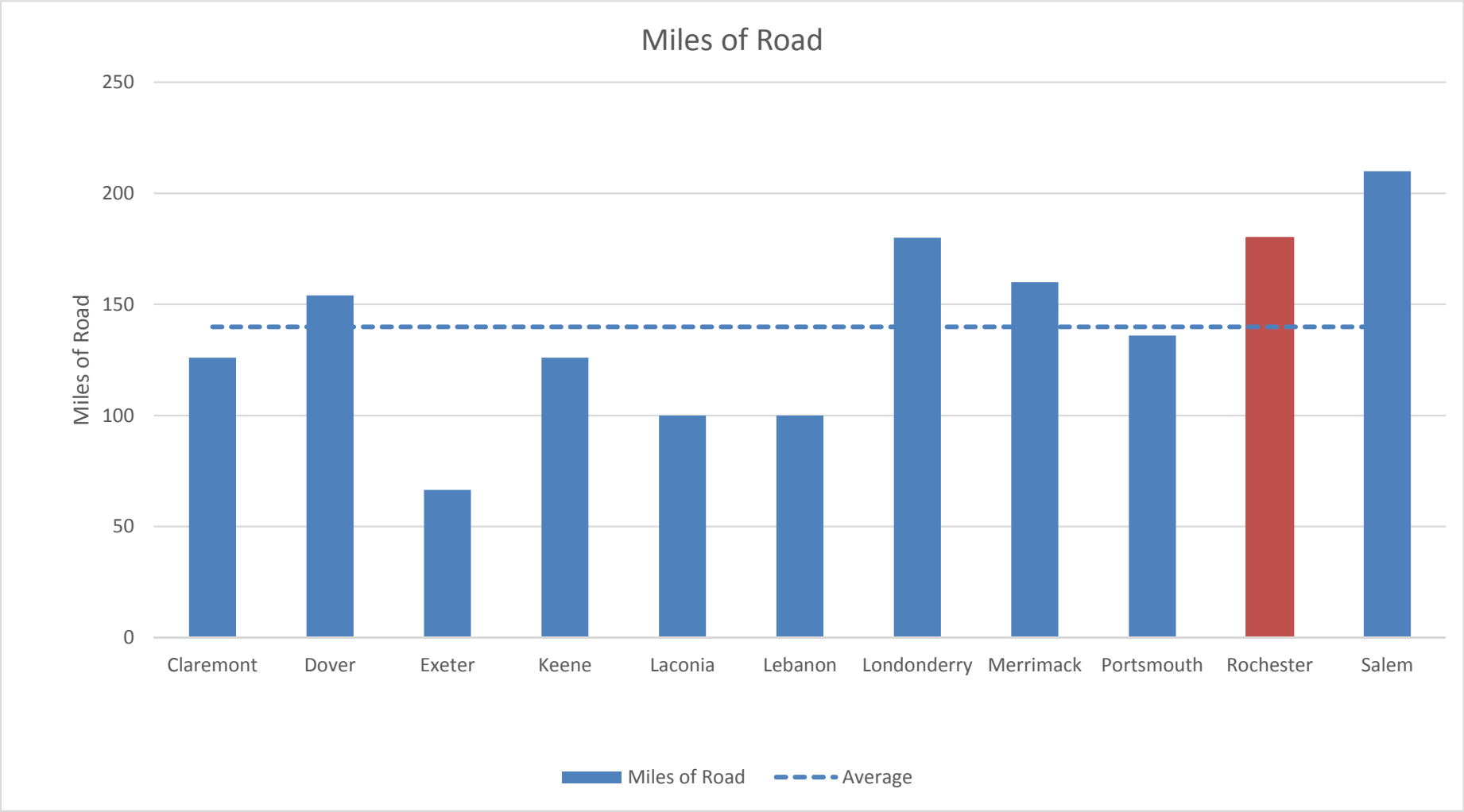
Miles of Road
250
200
150
100
50
0
Miles of Road
Claremont
Dover
Exeter
Keene
Laconia
Lebanon
Londonderry
Merrimack
Portsmouth
Rochester
Salem
Miles of Road
Average

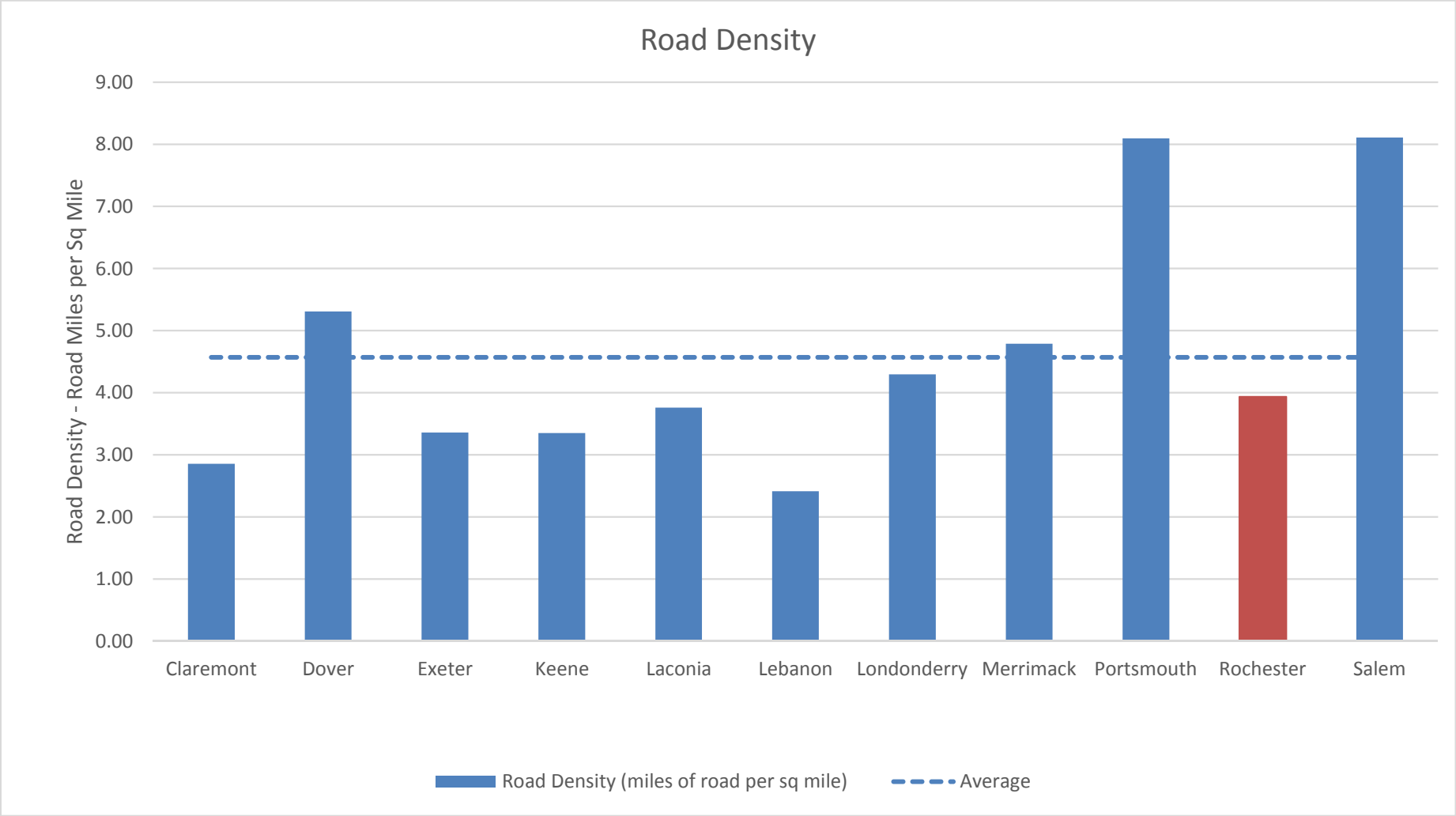
Road Density
Road Density - Road Miles per Sq Mile
9.00
8.00
7.00
6.00
5.00
4.00
3.00
2.00
1.00
0.00
Claremont
Dover
Exeter
Keene
Laconia
Lebanon
Londonderry
Merrimack
Portsmouth
Rochester
Salem
Road Density (miles of road per sq mile)
Average

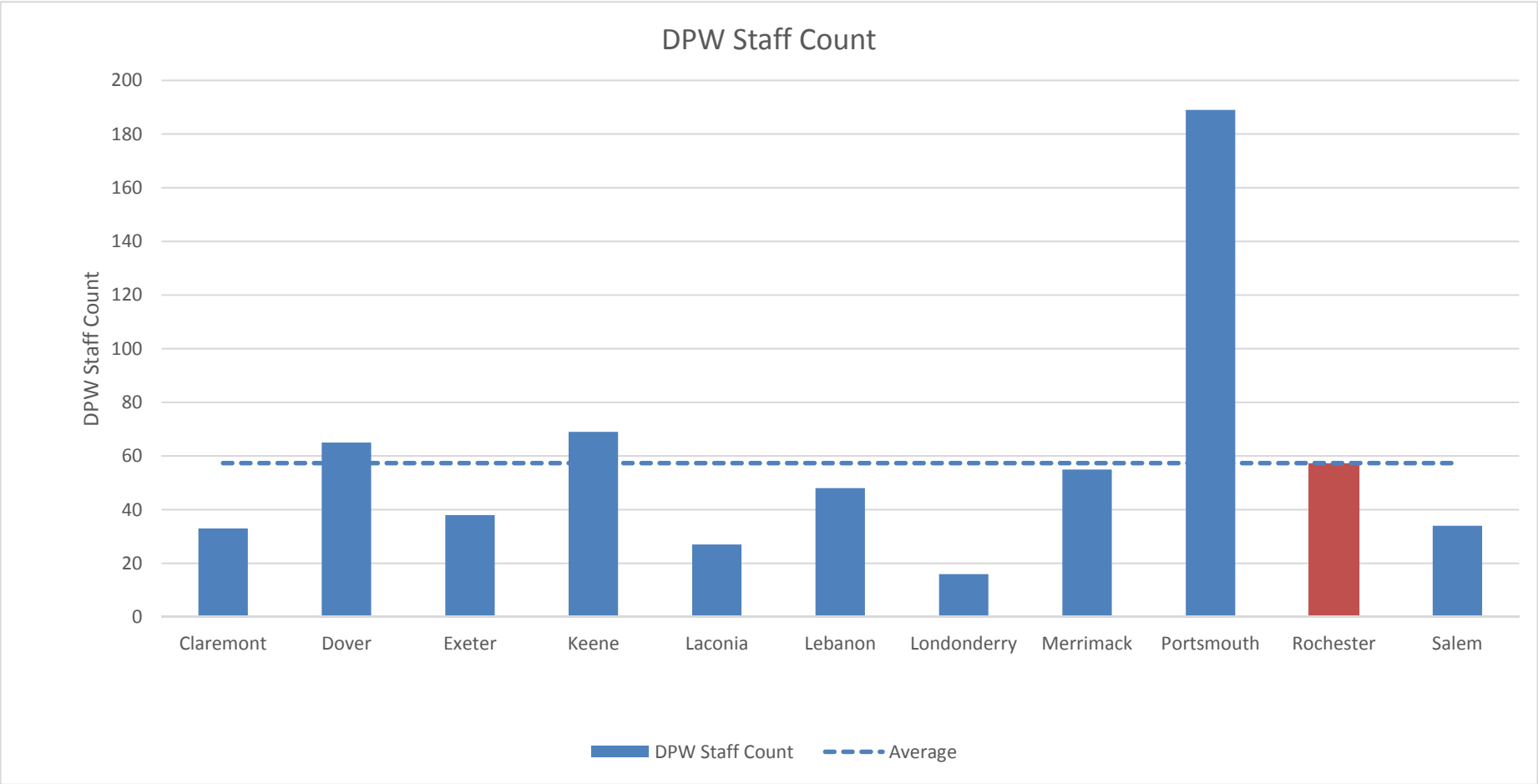
DPW Staff Count
DPW Staff Count
200
180
160
140
120
100
80
60
40
20
0
Claremont
Dover
Exeter
Keene
Laconia
Lebanon
Londonderry
Merrimack
Portsmouth
Rochester
Salem
DPW Staff Count
Average

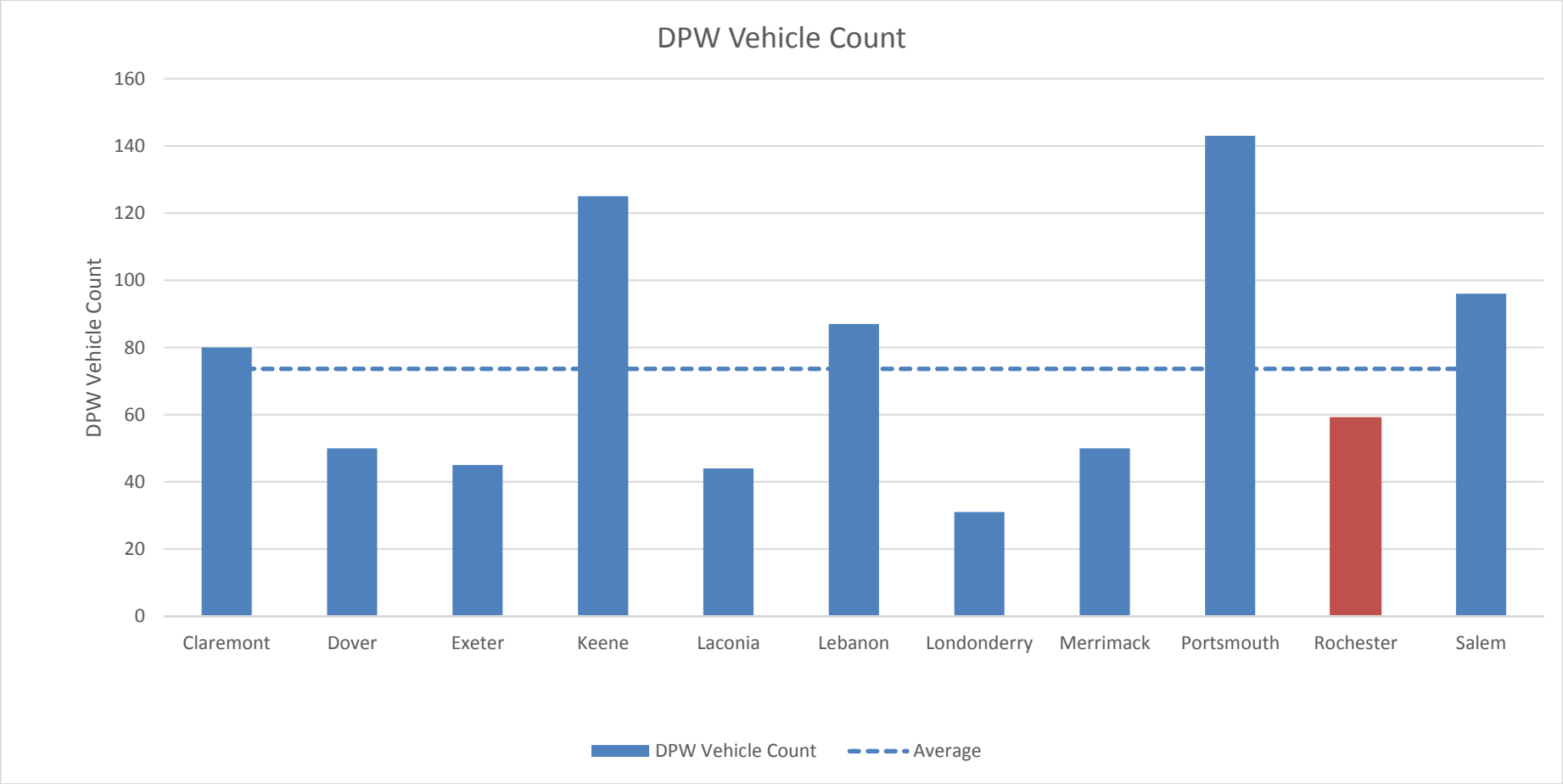
DPW Vehicle Count
DPW Vehicle Count
160
140
120
100
80
60
40
20
0
Claremont
Dover
Exeter
Keene
Laconia
Lebanon
Londonderry
Merrimack
Portsmouth
Rochester
Salem
DPW Vehicle Count
Average

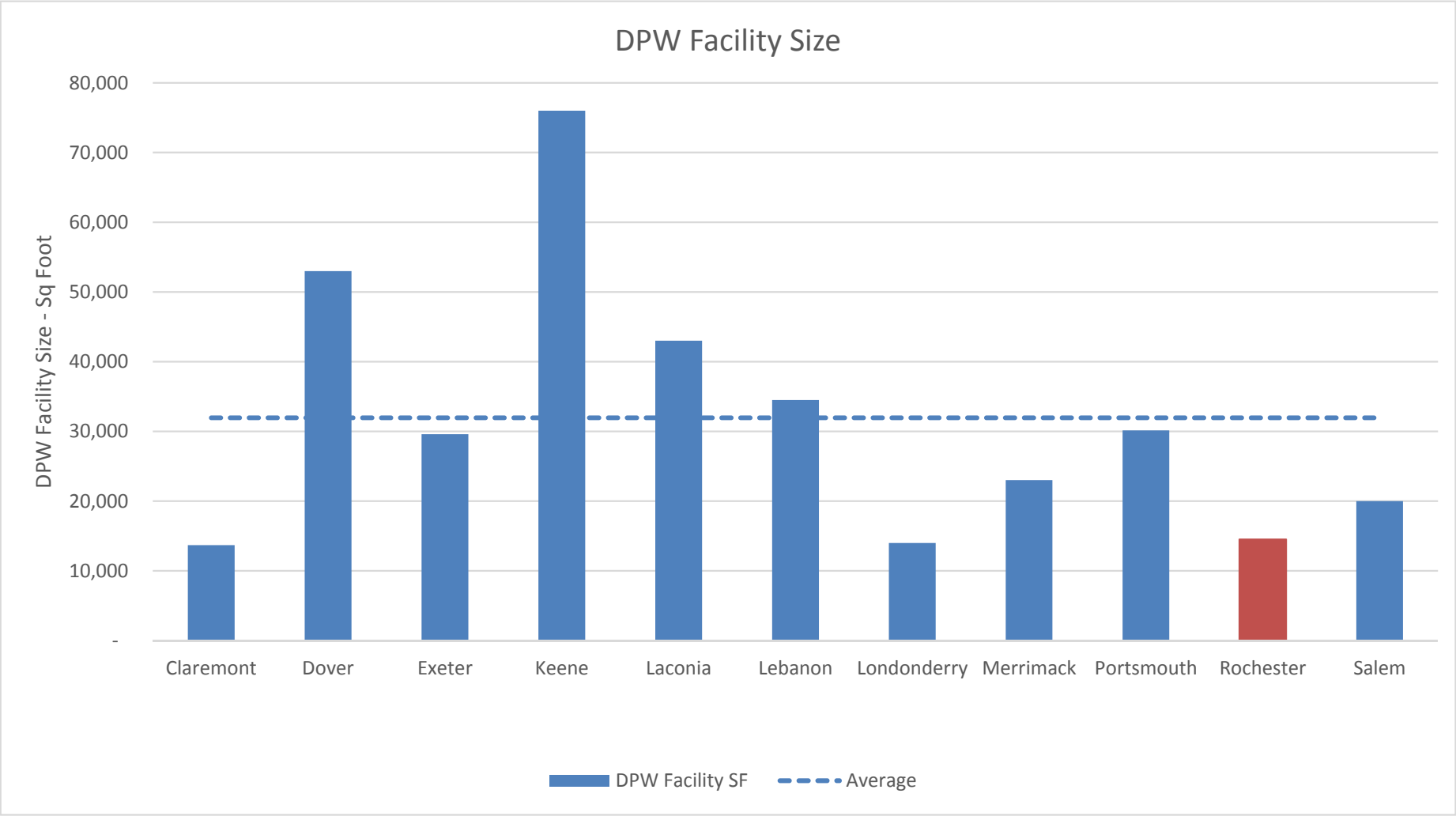
DPW Facility Size
DPW Facility Size - Sq Foot
80,000
70,000
60,000
50,000
40,000
30,000
20,000
10,000
-
Claremont
Dover
Exeter
Keene
Laconia
Lebanon
Londonderry
Merrimack
Portsmouth
Rochester
Salem
DPW Facility SF
Average

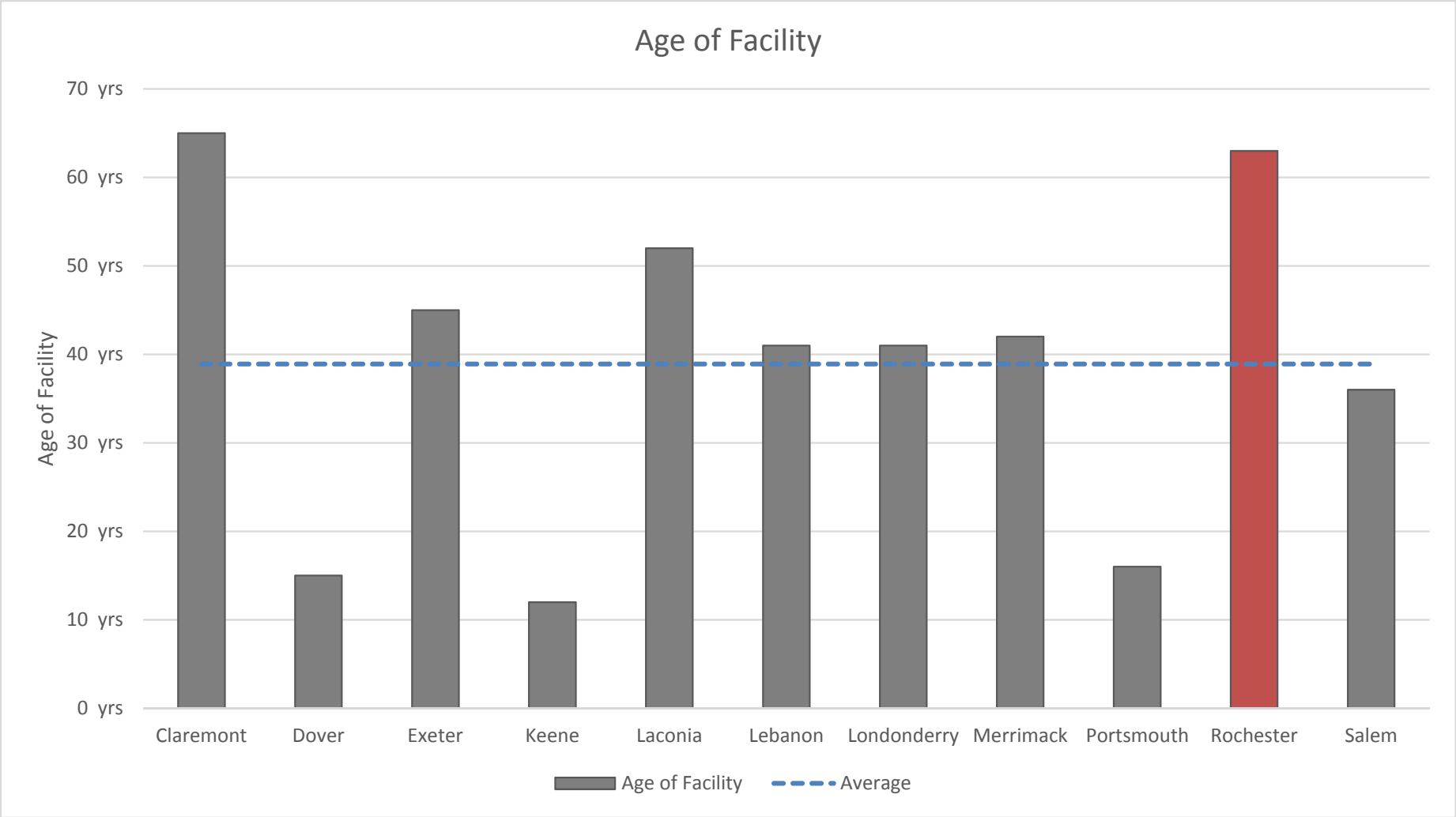
Age of Facility
70 yrs
60 yrs
50 yrs
40 yrs
30 yrs
20 yrs
10 yrs
0 yrs
Age of Facility
Claremont
Dover
Exeter
Keene
Laconia
Lebanon
Londonderry
Merrimack
Portsmouth
Rochester
Salem
Age of Facility
Average

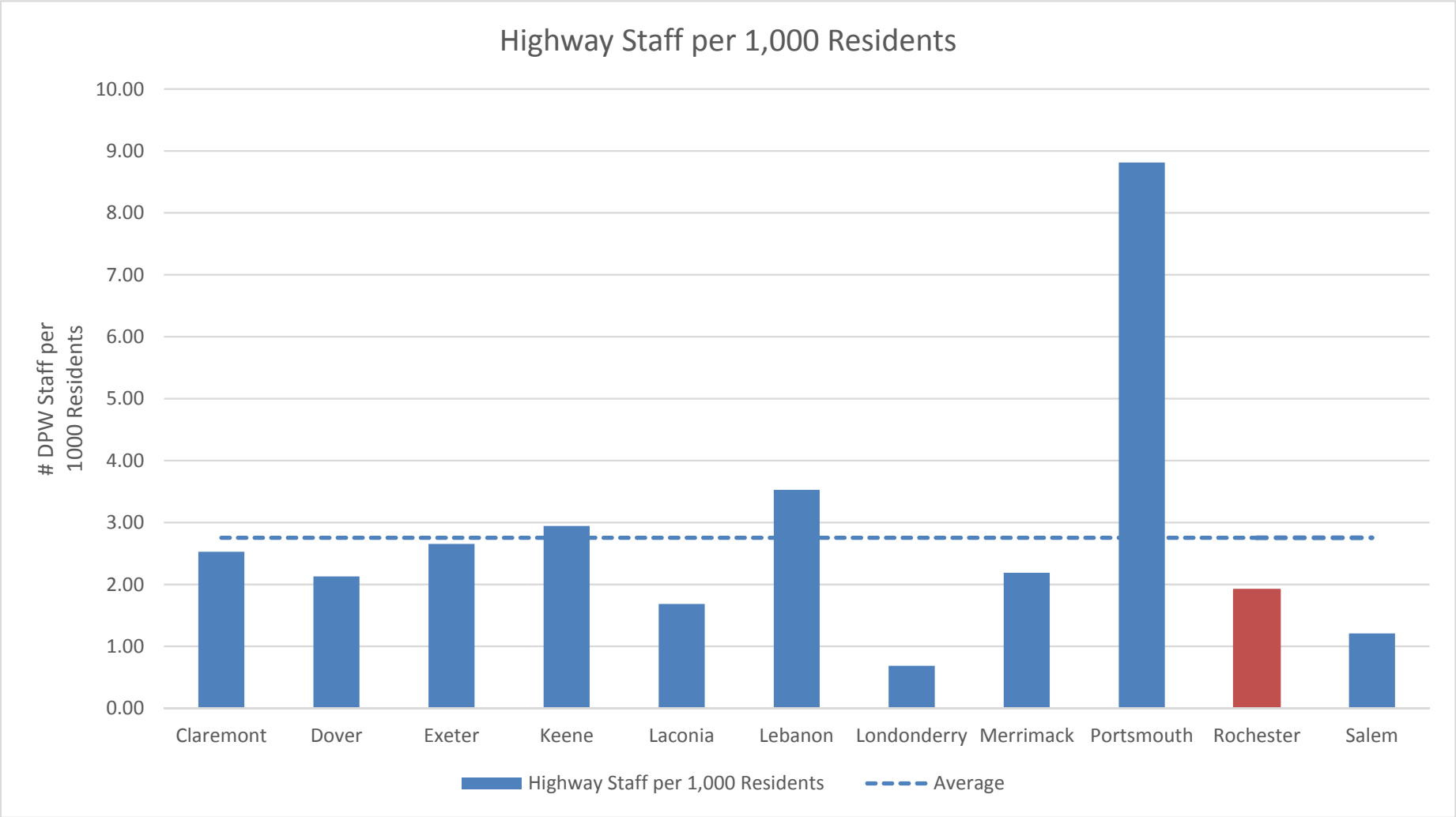
Highway Staff per 1,000 Residents
DPW Staff per 1000 Residents
10.00
9.00
8.00
7.00
6.00
5.00
4.00
3.00
2.00
1.00
0.00
Claremont
Dover
Exeter
Keene
Laconia
Lebanon
Londonderry
Merrimack
Portsmouth
Rochester
Salem
Highway Staff per 1,000 Residents
Average

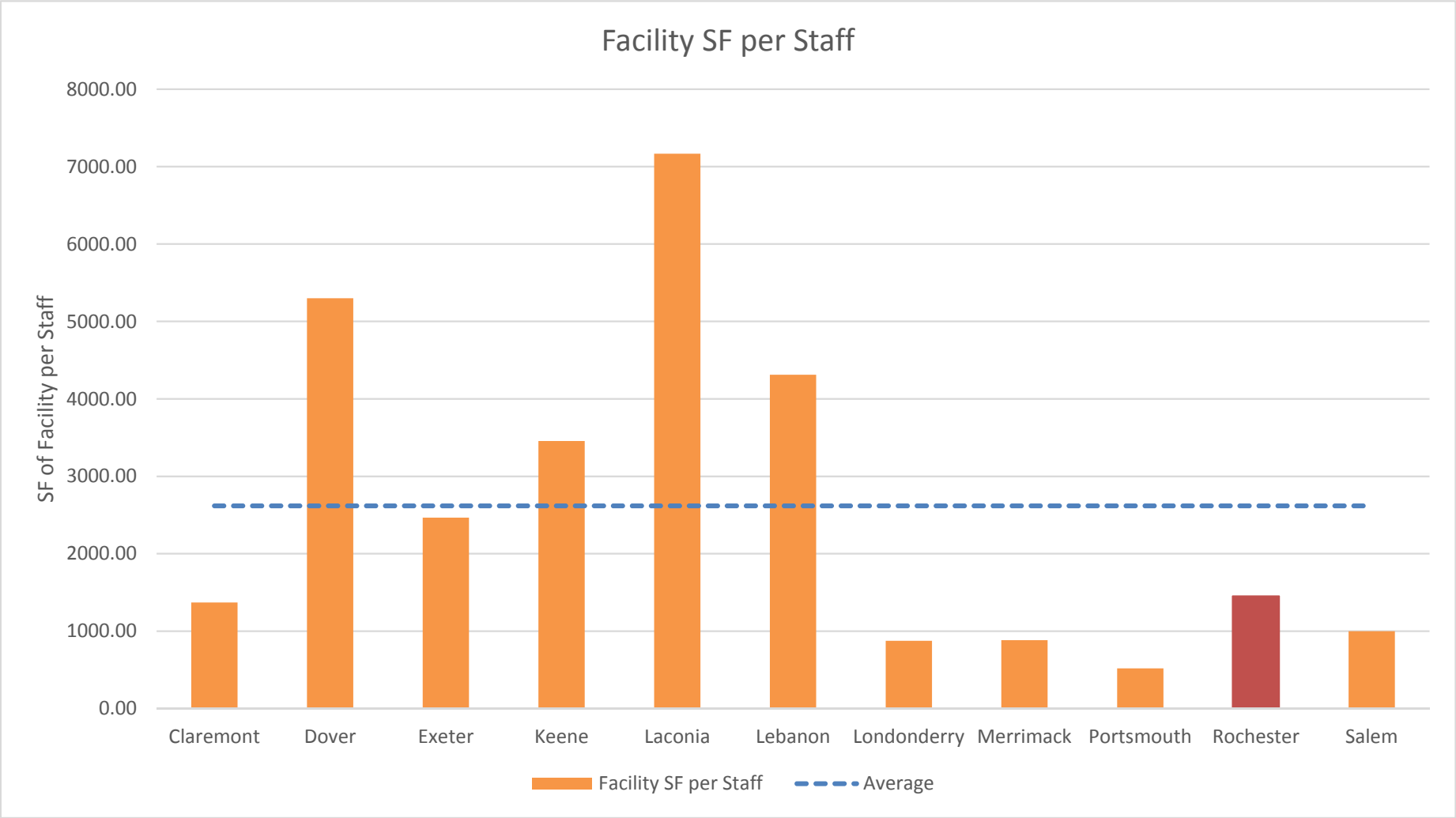
Facility SF per Staff
SF of Facility per Staff
8000.00
7000.00
6000.00
5000.00
4000.00
3000.00
2000.00
1000.00
0.00
Claremont
Dover
Exeter
Keene
Laconia
Lebanon
Londonderry
Merrimack
Portsmouth
Rochester
Salem
Facility SF per Staff
Average

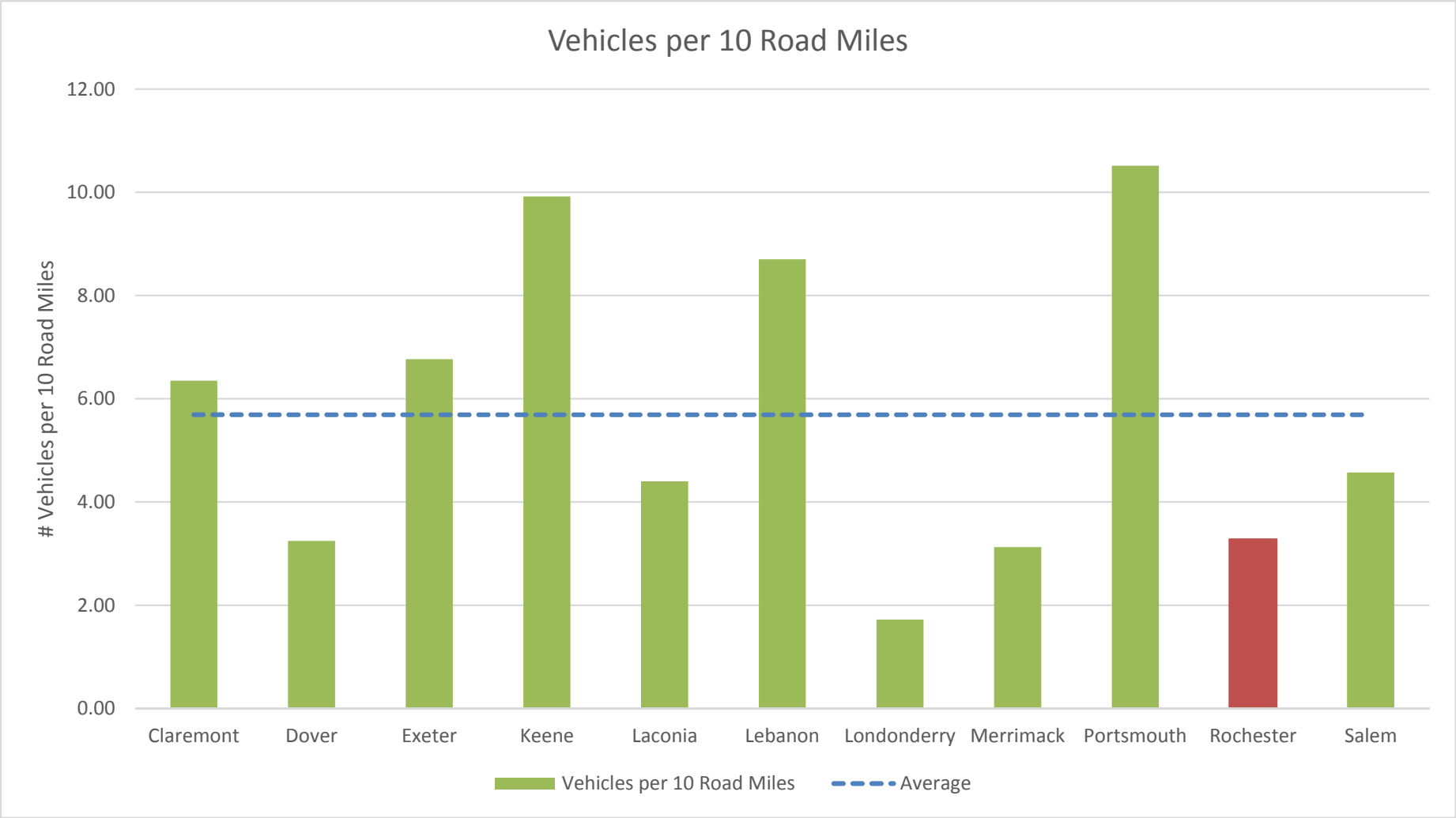
Vehicles per 10 Road Miles
Vehicles per 10 Road Miles
12.00
10.00
8.00
6.00
4.00
2.00
0.00
Claremont
Dover
Exeter
Keene
Laconia
Lebanon
Londonderry
Merrimack
Portsmouth
Rochester
Salem
Vehicles per 10 Road Miles
Average

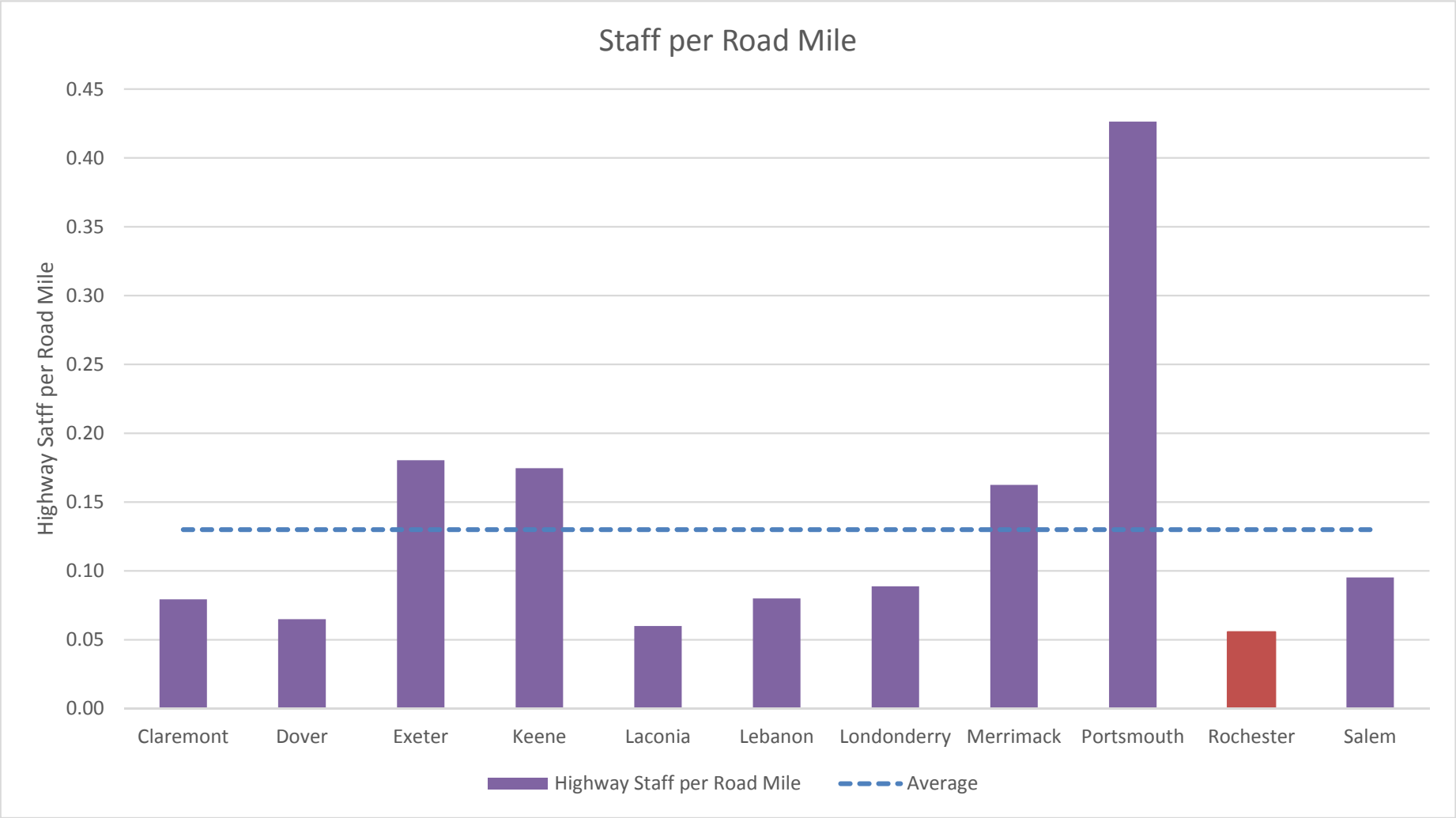
Staff per Road Mile
Highway Satff per Road Mile
0.45
0.40
0.35
0.30
0.25
0.20
0.15
0.10
0.05
0.00
Claremont
Dover
Exeter
Keene
Laconia
Lebanon
Londonderry
Merrimack
Portsmouth
Rochester
Salem
Highway Staff per Road Mile
Average

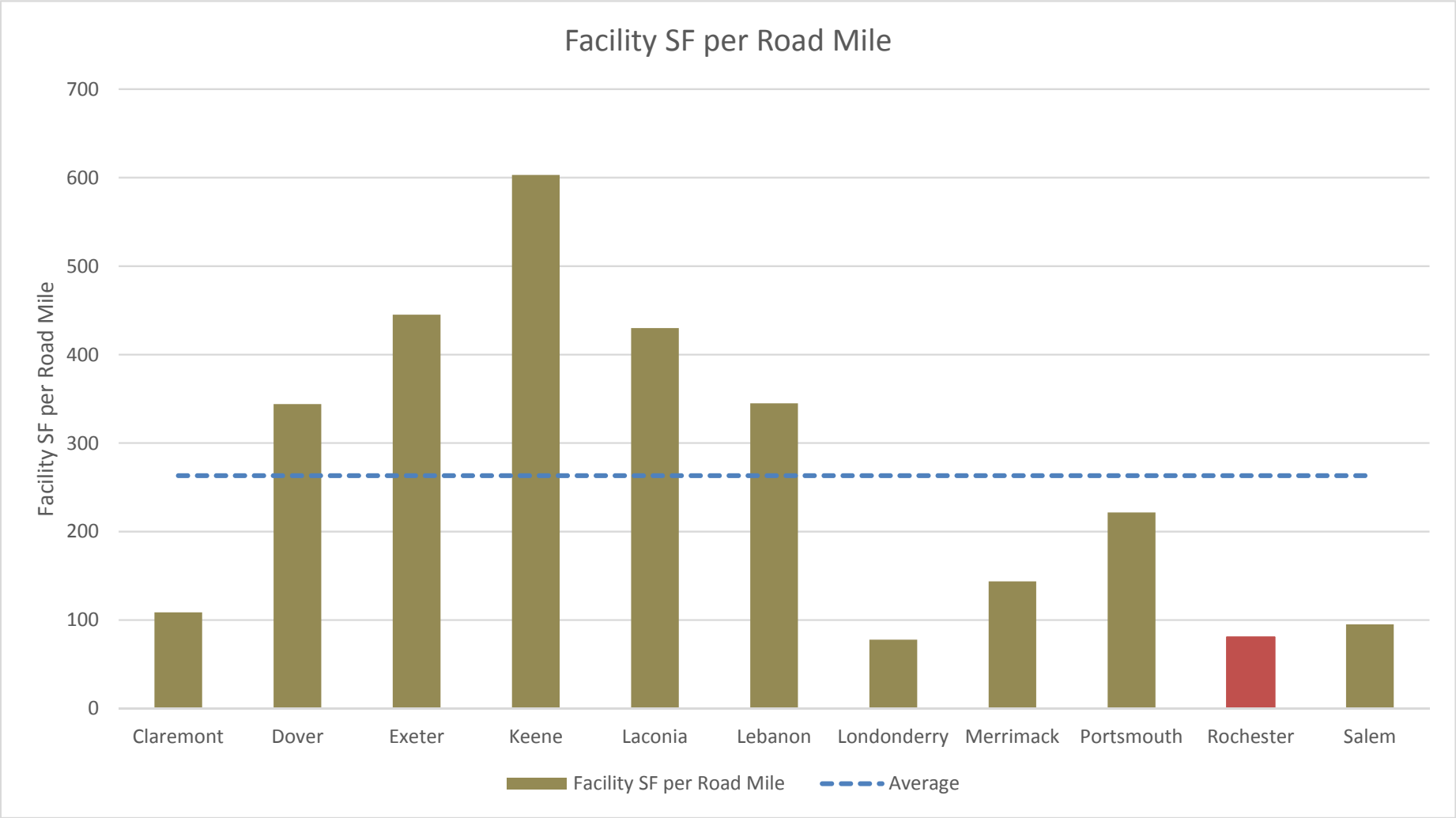
Facility SF per Road Mile
Facility SF per Road Mile
700
600
500
400
300
200
100
0
Claremont
Dover
Exeter
Keene
Laconia
Lebanon
Londonderry
Merrimack
Portsmouth
Rochester
Salem
Facility SF per Road Mile
Average

Community Ratio Comparisons

Community	Water & Sewer Staff per 1,000 Residents	W&S Staff per Miles of W/S
Claremont		
Dover		
Exeter	1.12	0.16
Keene		
Laconia		
Lebanon	1.76	0.17
Londonderry		
Merrimack		
Portsmouth	2.33	0.16
Rochester	0.74	0.11
Salem		
Average	1.49	0.15
Rochester % above or below Average	-50%	-27%

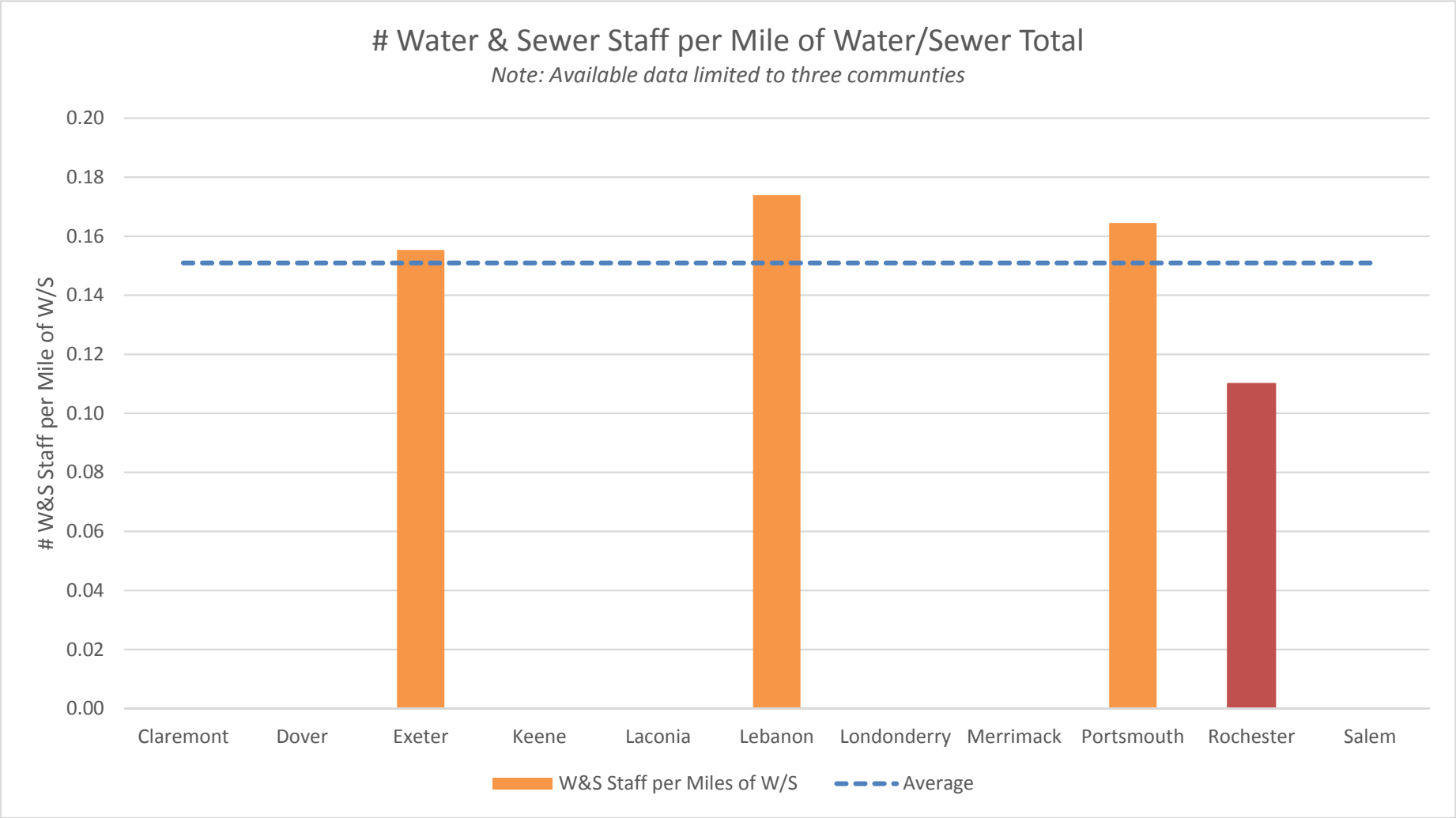
Water & Sewer Staff per Mile of Water/Sewer Total
Note: Available data limited to three communties
W&S Staff per Mile of W/S
0.20
0.18
0.16
0.14
0.12
0.10
0.08
0.06
0.04
0.02
0.00
Claremont
Dover
Exeter
Keene
Laconia
Lebanon
Londonderry
Merrimack
Portsmouth
Rochester
Salem
W&S Staff per Miles of W/S
Average

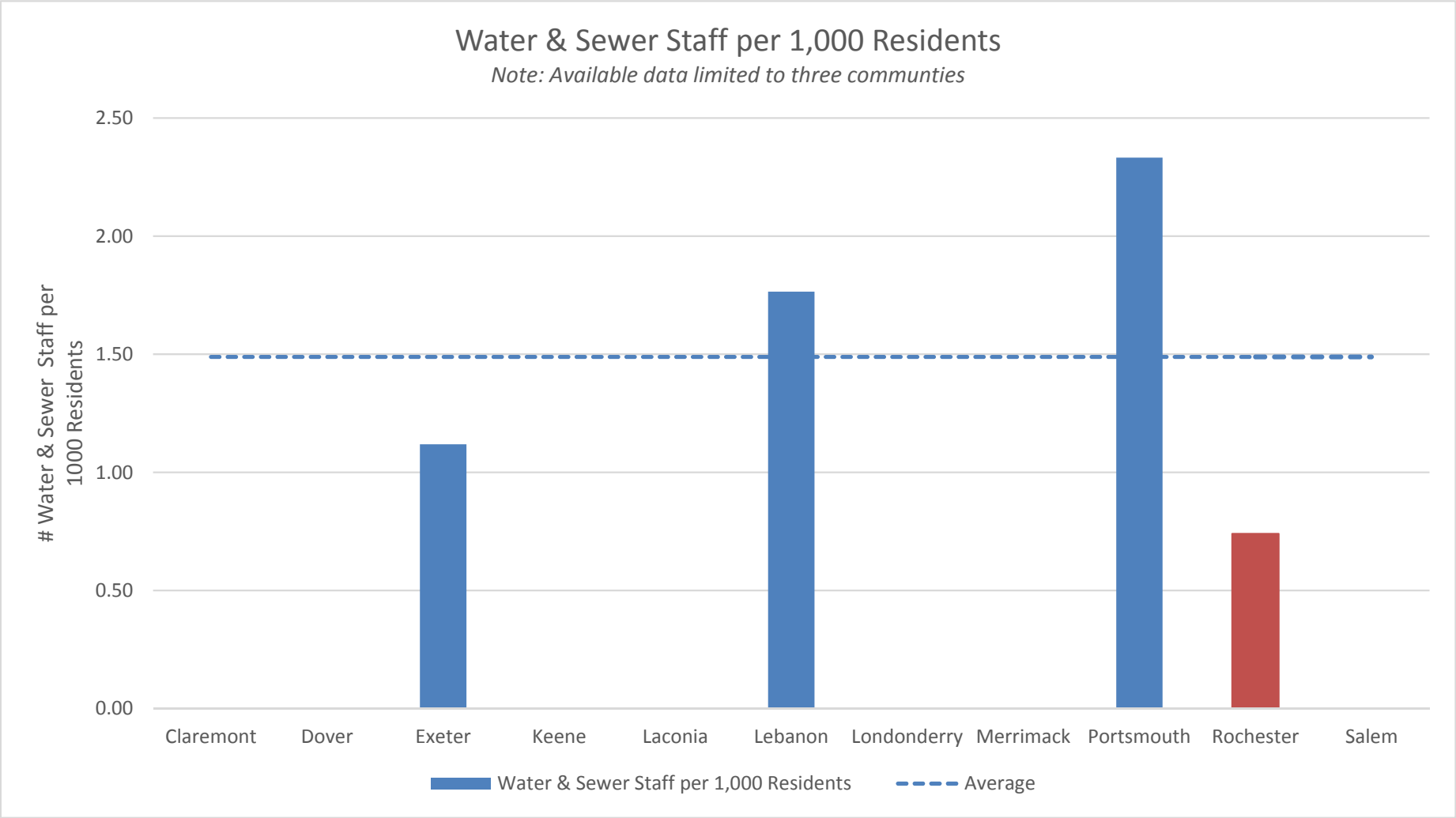
Water & Sewer Staff per 1,000 Residents
Note: Available data limited to three communties
Water & Sewer Staff per 1000 Residents
2.50
2.00
1.50
1.00
0.50
0.00
Claremont
Dover
Exeter
Keene
Laconia
Lebanon
Londonderry
Merrimack
Portsmouth
Rochester
Salem
Water & Sewer Staff per 1,000 Residents
Average

EXHIBIT G

Construction and Project Cost Estimate

City of Rochester, NH
New Public Works Facility
Budget Total Project Cost

January 20, 2015

New Construction Area	Size (SF)	Cost/SF (w/ markups)	Cost
Administration / Employee Facilities	11,695	$ 280	$ 3,270,171
Shops	6,740	$ 196	$ 1,324,347
Vehicle Maintenance (not including equipment)	12,000	$ 196	$ 2,357,888
Wash	1,700	$ 372	$ 631,667
Vehicle/Equipment Storage	22,700	$ 155	$ 3,516,805
Open Vehicle/Equipment Storage	8,350	$ 75	$ 626,250
Mezzanines (not inlcuded in total footprint)	5,800	$ 52	$ 301,600
		Place a "x" if applicable	
Increase for Specialty Finishes / Conventional Construction (21%):			
Decrease for Cost Effective Bldg & Finishes (-10%):		x	$ (1,110,088)
Regional Adjustment Factor (-10%):		x	$ (1,110,088)
New Construction Subtotal:	**63,185**		**$ 9,808,553**
Building Cost per SF:	$ 155		
		Place a "x" here if included	
Industrial Equipment			
- Wash Equipment	$ 75,000	x	$ 75,000.00
- Heavy Duty Vehicle Lift (Fixed)	$ 114,400	x	$ 114,400.00
- Heavy Duty Vehicle Lift (Portable)	$ 83,200	x	$ 83,200.00
- Light Duty Vehicle Lift (16,000 lb capacity minimum)	$ 26,000	x	$ 26,000.00
- Bridge Crane	$ 104,000	x	$ 104,000.00
- Monorail Crane	$ 60,000	x	$ 60,000.00
- Overhead Lubrication System	$ 124,800	x	$ 124,800.00
- Miscellaneous Shop and Support Equipment	$ 52,000	x	$ 52,000.00
- Storage Shelving / Benches / Racks	$ 41,600	x	$ 41,600.00
- Exhaust Removal System	$ 31,200	x	$ 31,200.00
		Place a "x" if applicable	
Regional Adjustment Factor (-10%):		x	$ (71,220)
Industrial Equipment Subtotal:			**$ 640,980**
Fuel System			
- 2 - 10,000 Gallon Tanks	$ 83,200	x	$ 83,200
- Concrete Ballast Pad	$ 20,800		
- Concrete Surface Pad	$ 20,800	x	$ 20,800
- Pea Stone Backfill	$ 14,560	x	$ 14,560
- Dispensing System & Associated Pipe	$ 37,440	x	$ 37,440
- Canopy	$ 36,400	x	$ 36,400
- Fuel Management System	$ 26,000	x	$ 26,000
- Installation	$ 187,200	x	$ 187,200
- Subcontractor markups	$ 85,280	x	$ 85,280
		Place a "x" if applicable	
Regional Adjustment Factor (-10%):		x	$ (49,088)
Fuel System Subtotal:			**$ 441,792**
	Bldg & Equip Subtotal		$ 10,891,325
	Design Contingency (15%)		$ 1,633,699
Building & Equipment Total:			**$ 12,525,024**

City of Rochester, NH
New Public Works Facility
Budget Total Project Cost

January 20, 2015

Open Canopy Storage	6,000	$	78	$	468,000
Site Development (acres) - assumes level site with no contamination, existing structures/utilities, etc.	5	$	364,000	$	1,820,000
Specialty Site Work	1	$	150,000	$	150,000
Salt/Sand Sheds	7,000		68	$	473,200
			Place a "x" if applicable		
Regional Adjustment Factor (-10%):			x	$	(291,120)
	Site Developement Subtotal			$	2,620,080
	Design Contingency (15%)			$	393,012
Site Developemnt Total:				**$**	**3,013,092**
	Subtotal Bldg, Equip, & Site:			$	15,538,116
	Escalation (4% for one year): (See Below for Escalation)			$	-
	Total Construction: (current dollars)			**$**	**15,538,116**
	Total Construction Cost/SF:				**$246**
Owner's Soft Costs					
A&E Fees (design, bid, const.)	$ 1,864,574	(Assume 12% of Const. Value)			
A&E Special Services	$ 466,143	(Assume 3% of Const. Value)			
Owner's Project Manager Fees	$ -	(Avg 4% of Const. Value)			
Furnishings (FFE)	$ -	allowance			
Communic. / Low Voltage System	$ -	allowance			
Temporary Facilities	$ -	allowance			
Printing Cost - Advertisement	$ -	allowance			
Legal Costs	$ -	allowance			
Commissioning	$ -	allowance			
Abatement	$ -	allowance			
Chapter 17 Test & Inspections	$ -	allowance			
Owner Bonding Costs	$ -	allowance			
Construction Phase Contingency (8%)	$ 1,243,049	allowance			
	Total Soft Costs: (current dollars)			**$**	**3,573,767**
	TOTAL PROJECT COST (2014 dollars)			**$**	**19,111,882**
Projected Escalation Costs					
	3 Years @ 4%/yr (2017 dollars)				**$21,498,268**
	5 Years @ 4%/yr (2019 dollars)				**$23,252,527**